C200H I/O Terminal Block Conversion Adapter

CS1W-AT2□□

CSM_CS1W-AT2___DS_E_3_3

Easy and secure replacement by reusing the I/O terminal block wiring

- The C200H I/O Terminal Block Conversion Adapter is a terminal block conversion adapter to reuse the terminal block wiring of the existing C200H I/O Units as is when replacing C200H Series with CS Series.
- If you use this terminal block conversion adapter, you don't need to redo the I/O wiring, by which you can reduce the time for wiring works, wiring check, and test run.

Features

- The terminal blocks of existing C200H I/O Units can be reused.
- The C200H terminal blocks can be directly mounted onto CS-series I/O Units.

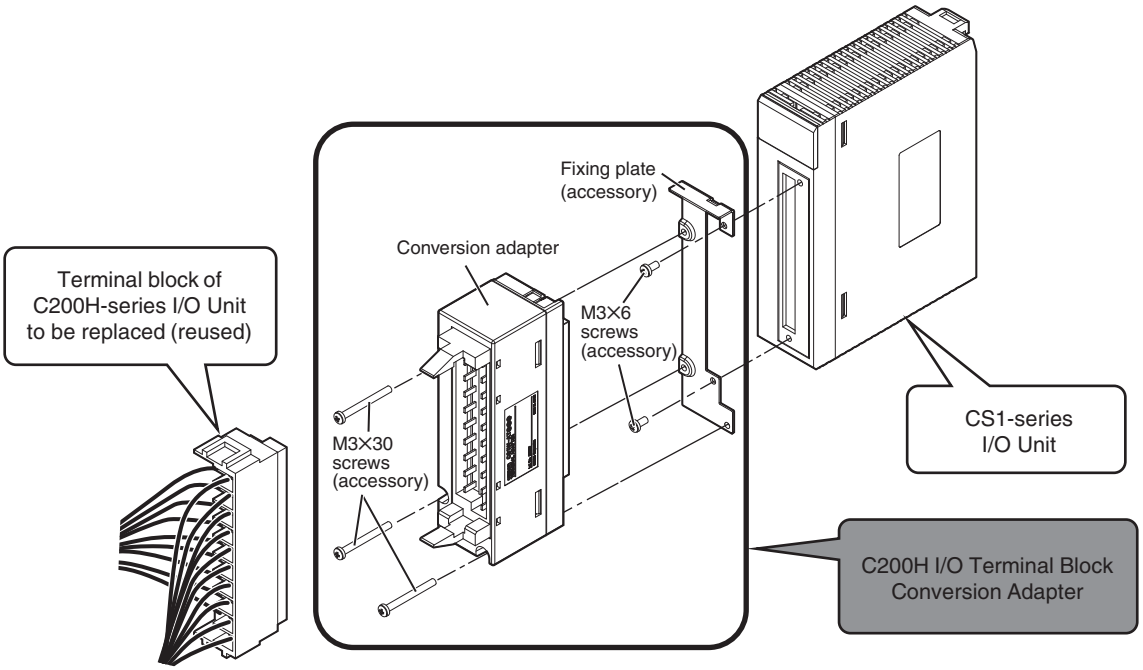

Ordering Information

Terminal Block Conversion Adapter

Product name	Specifications	Model	Standards
C200H I/O Terminal Block Conversion Adapter 	8-points, 10-pin type	**CS1W-AT201**	---
	8-points, 19-pin type	**CS1W-AT202**	---
	16-points, 19-pin type	**CS1W-AT211**	---

Connection of I/O Units and Terminal Block Conversion Adapter

C200H I/O Terminal Conversion Adapter Model	Replaced from: C200H-series I/O Units			Replaced to: CS-series I/O Units		
	Product name	Specifications	Model	Product name	Specifications	Model
CS1W-AT201	DC Input Unit	12 to 24 VDC, 8 inputs	**C200H-ID211**	DC Input Unit	7 mA at 24 VDC, 16 inputs	**CS1W-ID211**
	AC Input Unit	100 to 120 VAC, 8 inputs	**C200H-IA121**	AC Input Unit	100 to 120 VAC, 100 to 120 VDC, 16 inputs	**CS1W-IA111**
		200 to 240 VAC, 8 inputs	**C200H-IA221**		200 to 240 VAC, 16 inputs	**CS1W-IA211**
	AC/DC Input Unit	12 to 24 VAC/VDC, 8 inputs	**C200H-IM211**	DC Input Unit	7 mA at 24 VDC, 16 inputs	**CS1W-ID211 ✻1**
		Non-voltage contacts, 8 inputs, NPN	**C200H-ID001**			**CS1W-ID211 ✻2**
		Non-voltage contacts, 8 inputs, PNP	**C200H-ID002**			**CS1W-ID211 ✻2**
	Interrupt Input Unit	12 to 24 VDC, 8 inputs	**C200HS-INT01**	Interrupt Input Unit	7 mA at 24 VDC, 16 inputs	**CS1W-INT01 ✻3**
	Triac Output Unit	1.2 A at 250 VAC max., 8 outputs	**C200H-OA223**	Triac Output Unit	0.5 A at 250 VAC max., 16 outputs	**CS1W-OA211 ✻4**
		1 A at 120 VAC max., 8 outputs	**C200H-OA121-E**		0.5 A at 250 VAC max., 16 outputs	**CS1W-OA211**
		1 A at 250 VAC max., 8 outputs	**C200H-OA221**			**CS1W-OA211 ✻4**
	Relay Output Unit	2 A at 250 VAC/24 VDC max., 8 outputs	**C200H-OC221**	Relay Output Unit	2 A at 250 VAC/24 VDC max., 0.1 A at 120 VDC, 16 outputs	**CS1W-OC211**
		2 A at 250 VAC/24 VDC max., independent contacts, 5 outputs	**C200H-OC223**		2 A at 250 VAC/24 VDC max., 0.1 A at 120 VDC, independent contacts, 8 outputs	**CS1W-OC201**
	Transistor Output Unit	1 A at 12 to 48 VDC, 8 outputs, sinking	**C200H-OD411**	Transistor Output Unit	0.5 A at 12 to 24 VDC, 16 outputs	**CS1W-OD211 ✻4 ✻5**
		2.1 A at 24 VDC, 8 outputs, sinking	**C200H-OD213**			**CS1W-OD211 ✻4**
		0.8 A at 24 VDC, 8 outputs, sourcing	**C200H-OD214**		0.5 A at 24 VDC, 16 outputs	**CS1W-OD212 ✻6**
		0.3 A at 5 to 24 VDC, 8 outputs, sourcing	**C200H-OD216**			**CS1W-OD212 ✻7**
CS1W-AT211	DC Input Unit	24 VDC, 16 inputs	**C200H-ID212**	DC Input Unit	7 mA at 24 VDC, 16 inputs	**CS1W-ID211**
	AC Input Unit	100 to 120 VAC, 16 inputs	**C200H-IA122**	AC Input Unit	100 to 120 VAC, 100 to 120 VDC, 16 inputs	**CS1W-IA111**
		100 to 120 VAC, 16 inputs	**C200H-IA122V**			**CS1W-IA111**
		200 to 240 VAC, 16 inputs	**C200H-IA222**		200 to 240 VAC, 16 inputs	**CS1W-IA211**
		200 to 240 VAC, 16 inputs	**C200H-IA222V**			**CS1W-IA211**
	AC/DC Input Unit	24 VAC/VDC, 16 inputs	**C200H-IM212**	DC Input Unit	7 mA at 24 VDC, 16 inputs	**CS1W-ID211 ✻1**
	Relay Output Unit	2 A at 250 VAC/24 VDC max., 16 outputs	**C200H-OC226**	Relay Output Unit	2 A at 250 VAC/24 VDC max., 0.1 A at 120 VDC, 16 outputs	**CS1W-OC211**
		2 A at 250 VAC/24 VDC max., 16 outputs	**C200H-OC226N**			**CS1W-OC211**
		2 A at 250 VAC/24 VDC max., 12 outputs	**C200H-OC222**			**CS1W-OC211**
		2 A at 250 VAC/24 VDC max., 12 outputs	**C200H-OC222V**			**CS1W-OC211**
		2 A at 250 VAC/24 VDC max., 12 outputs	**C200H-OC222N**			**CS1W-OC211**
		2 A at 250 VAC/24 VDC max., 16 outputs	**C200H-OC225**			**CS1W-OC211**
	Transistor Output Unit	0.3 A at 24 VDC, 12 outputs, sinking	**C200H-OD211**	Transistor Output Unit	0.5 A at 12 to 24 VDC, 16 outputs	**CS1W-OD211**
		0.3 A at 24 VDC, 16 outputs, sinking	**C200H-OD212**			**CS1W-OD211**
		0.3 A at 5 to 24 VDC, 12 outputs, sourcing	**C200H-OD217**		0.5 A at 24 VDC, 16 outputs	**CS1W-OD212 ✻8**
		1 A at 24 VDC, 16 outputs, sourcing, load short-circuit protection	**C200H-OD21A**			**CS1W-OD212 ✻9**
	Triac Output Unit	0.8 A at 250 VAC max, 16 outputs	**C200H-OA225**	Triac Output Unit	0.5 A at 250 VAC max., 16 outputs	**CS1W-OA211**
		0.3 A at 250 VAC max, 12 outputs	**C200H-OA222**			**CS1W-OA211**
		0.3 A at 250 VAC max, 12 outputs	**C200H-OA222V**			**CS1W-OA211**
		0.5 A at 250 VAC max, 12 outputs	**C200H-OA224**			**CS1W-OA211**
CS1W-AT202	Relay Output Unit	2 A at 250 VAC/24 VDC max., independent contacts, 8 outputs	**C200H-OC224**	Relay Output Unit	2 A at 250 VAC/24 VDC max., 0.1 A at 120 VDC, independent contacts, 8 outputs	**CS1W-OC201**
		2 A at 250 VAC/24 VDC max., independent contacts, 8 outputs	**C200H-OC224V**			**CS1W-OC201**
		2 A at 250 VAC/24 VDC max., independent contacts, 8 outputs	**C200H-OC224N**			**CS1W-OC201**

✻1. 24 VDC only
✻2. Need to add 24 VDC power supply.
✻3. There is a restriction to the number of mountable units.
✻4. The blown fuse detection bit (Bit 08) cannot be used.
✻5. 12 to 24 VDC only
✻6. The alarm bits (Bit 08, 09, 10, and 11) cannot be used.
Note: Including models whose production are discontinued.
✻7. Remove the wire from A8 and connect it to A9. Connect 0 V of power supply to A8.
✻8. Remove the wire from A8 and connect it to B9. Connect 0 V of power supply to A8.
✻9. The alarm outputs cannot be used.

Installation Procedure of Terminal Block Conversion Adapter

Step	Procedure	Drawing
1	Remove the terminal block from the C200H-series I/O Unit.	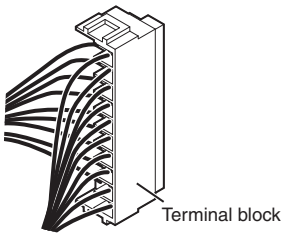
2	Attach the fixing plate to the CS-series I/O Unit and fix it with the M3×6 screws. The tightening torque is 0.5 to 0.67 N·m.	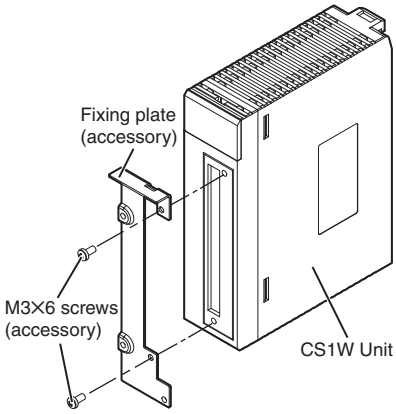
3	Attach the conversion adapter to the fixing plate and fix it with the M3x30 screws. The tightening torque is 0.4 to 0.48 N·m. If the tightening torque is too much, the product and screws may be damaged.	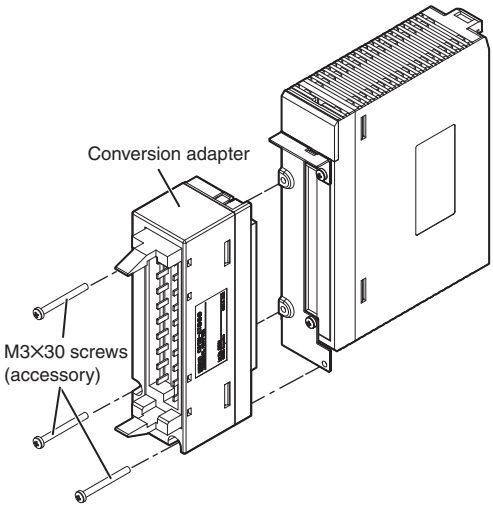
4	Attach the terminal block removed in Step 1 to the conversion adapter.	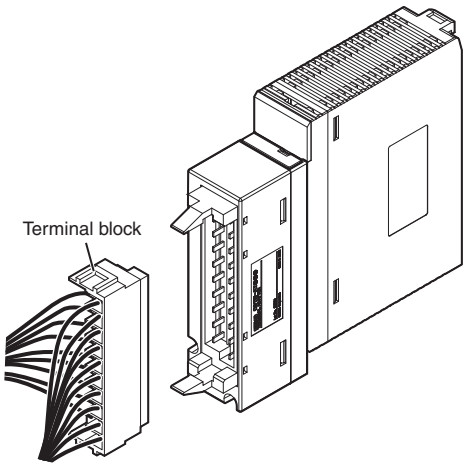

Note: When you reuse a terminal block with wiring, confirm that there is no problem in the terminal block and wiring conditions.

- The screws are securely tightened.
- The cables are not damaged.
- There is no rust or corrosion.
- The terminal block is not damaged. (The terminal block is securely inserted and fixed.)

Dimensions

(Unit:mm)

CS1W-AT201

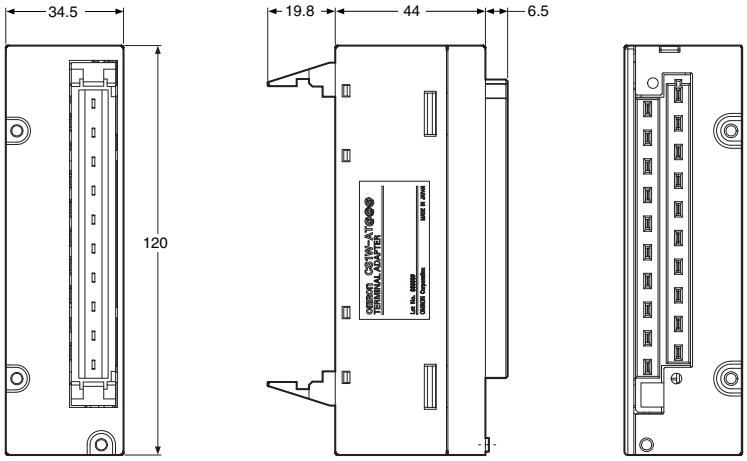

CS1W-AT211
CS1W-AT202

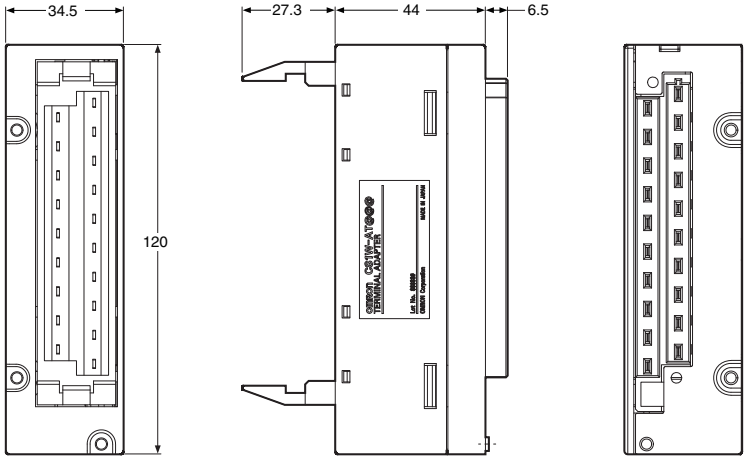

Dimensional Difference List

Replaced to: CS-series I/O Units + Conversion adapter	Replaced from: C200H-series I/O Units
CS1W-AT201 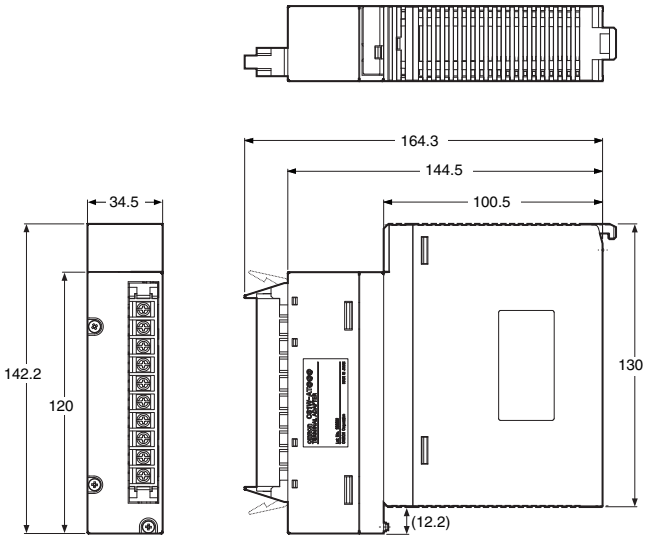	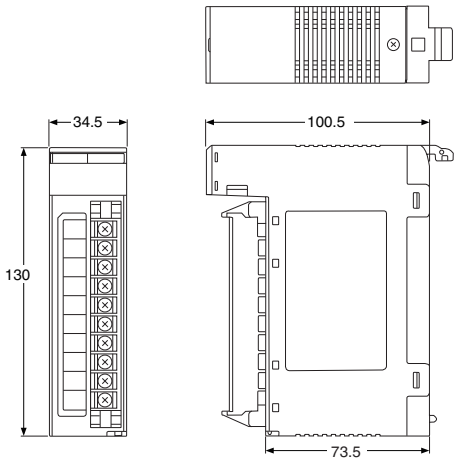
CS1W-AT211/CS1W-AT202 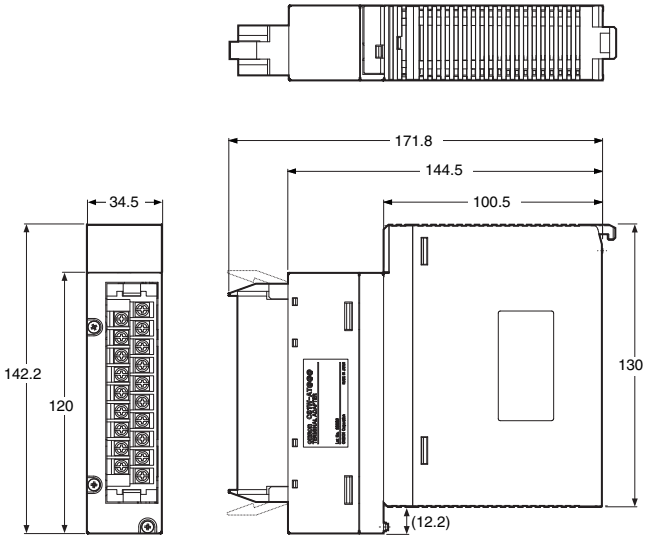	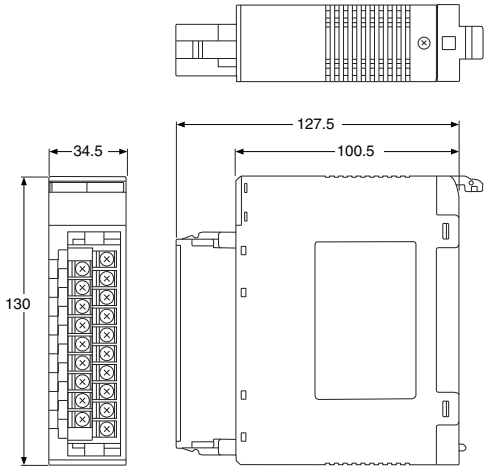

Pin Assignment

Terminal Block Conversion Adapter	Pin assignment and internal wiring
CS1W-AT201	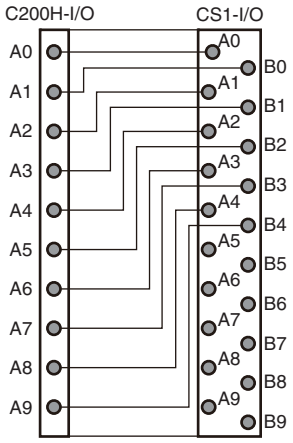
CS1W-AT211	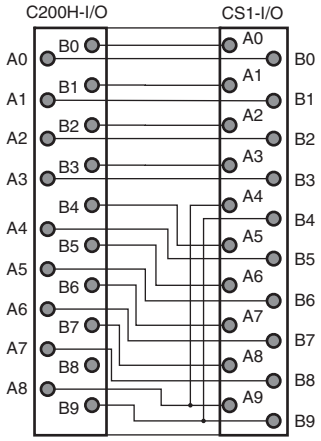

Terminal Block Conversion Adapter	Pin assignment and internal wiring
CS1W-AT202	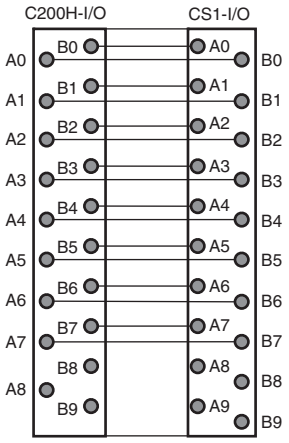

Related Manuals

The following manuals are related to the C200H Terminal Block Conversion Adapter. Use there manuals for reference.

Cat. No.	Manual name	Description
P069-E1	C200H Replacement Guide From C200H to CS1	Refer to this guide when replacing C200H with CS1.
P070-E1	C200HS Replacement Guide From C200HS to CS1	Refer to this guide when replacing C200HS with CS1.
P071-E1	C200HX/HG/HE Replacement Guide From C200HX/HG/HE to CS1	Refer to this guide when replacing C200HX/HG/HE with CS1.

Terms and Conditions Agreement

Read and understand this catalog.
Please read and understand this catalog before purchasing the products. Please consult your OMRON representative if you have any questions or comments.

Warranties.
(a) Exclusive Warranty. Omron's exclusive warranty is that the Products will be free from defects in materials and workmanship for a period of twelve months from the date of sale by Omron (or such other period expressed in writing by Omron). Omron disclaims all other warranties, express or implied.
(b) Limitations. OMRON MAKES NO WARRANTY OR REPRESENTATION, EXPRESS OR IMPLIED, ABOUT NON-INFRINGEMENT, MERCHANTABILITY OR FITNESS FOR A PARTICULAR PURPOSE OF THE PRODUCTS. BUYER ACKNOWLEDGES THAT IT ALONE HAS DETERMINED THAT THE
PRODUCTS WILL SUITABLY MEET THE REQUIREMENTS OF THEIR INTENDED USE.
Omron further disclaims all warranties and responsibility of any type for claims or expenses based on infringement by the Products or otherwise of any intellectual property right. (c) Buyer Remedy. Omron's sole obligation hereunder shall be, at Omron's election, to (i) replace (in the form originally shipped with Buyer responsible for labor charges for removal or replacement thereof) the non-complying Product, (ii) repair the non-complying Product, or (iii) repay or credit Buyer an amount equal to the purchase price of the non-complying Product; provided that in no event shall Omron be responsible for warranty, repair, indemnity or any other claims or expenses regarding the Products unless Omron's analysis confirms that the Products were properly handled, stored, installed and maintained and not subject to contamination, abuse, misuse or inappropriate modification. Return of any Products by Buyer must be approved in writing by Omron before shipment. Omron Companies shall not be liable for the suitability or unsuitability or the results from the use of Products in combination with any electrical or electronic components, circuits, system assemblies or any other materials or substances or environments. Any advice, recommendations or information given orally or in writing, are not to be construed as an amendment or addition to the above warranty.
See http://www.omron.com/global/ or contact your Omron representative for published information.

Limitation on Liability; Etc.
OMRON COMPANIES SHALL NOT BE LIABLE FOR SPECIAL, INDIRECT, INCIDENTAL, OR CONSEQUENTIAL DAMAGES, LOSS OF PROFITS OR PRODUCTION OR COMMERCIAL LOSS IN ANY WAY CONNECTED WITH THE PRODUCTS, WHETHER SUCH CLAIM IS BASED IN CONTRACT, WARRANTY, NEGLIGENCE OR STRICT LIABILITY.
Further, in no event shall liability of Omron Companies exceed the individual price of the Product on which liability is asserted.

Suitability of Use.
Omron Companies shall not be responsible for conformity with any standards, codes or regulations which apply to the combination of the Product in the Buyer's application or use of the Product. At Buyer's request, Omron will provide applicable third party certification documents identifying ratings and limitations of use which apply to the Product. This information by itself is not sufficient for a complete determination of the suitability of the Product in combination with the end product, machine, system, or other application or use. Buyer shall be solely responsible for determining appropriateness of the particular Product with respect to Buyer's application, product or system. Buyer shall take application responsibility in all cases.
NEVER USE THE PRODUCT FOR AN APPLICATION INVOLVING SERIOUS RISK TO LIFE OR PROPERTY OR IN LARGE QUANTITIES WITHOUT ENSURING THAT THE SYSTEM AS A WHOLE HAS BEEN DESIGNED TO ADDRESS THE RISKS, AND THAT THE OMRON PRODUCT(S) IS PROPERLY RATED AND INSTALLED FOR THE INTENDED USE WITHIN THE OVERALL EQUIPMENT OR SYSTEM.

Programmable Products.
Omron Companies shall not be responsible for the user's programming of a programmable Product, or any consequence thereof.

Performance Data.
Data presented in Omron Company websites, catalogs and other materials is provided as a guide for the user in determining suitability and does not constitute a warranty. It may represent the result of Omron's test conditions, and the user must correlate it to actual application requirements. Actual performance is subject to the Omron's Warranty and Limitations of Liability.

Change in Specifications.
Product specifications and accessories may be changed at any time based on improvements and other reasons. It is our practice to change part numbers when published ratings or features are changed, or when significant construction changes are made. However, some specifications of the Product may be changed without any notice. When in doubt, special part numbers may be assigned to fix or establish key specifications for your application. Please consult with your Omron's representative at any time to confirm actual specifications of purchased Product.

Errors and Omissions.
Information presented by Omron Companies has been checked and is believed to be accurate; however, no responsibility is assumed for clerical, typographical or proofreading errors or omissions.

2018.2

In the interest of product improvement, specifications are subject to change without notice.

OMRON Corporation
Industrial Automation Company

http://www.ia.omron.com/