Phase-sequence Phase-loss Relay

K8AK-PH

Three-phase Phase-sequence Phase-loss Relay Using Voltage Detection Method

- Greater resistance to inverter noise. ***NEW***
- Distinguishes between correct phases, phase sequence, and phase loss when power is turned ON.
- Supports phase loss detection when the motor is operating.
- 5 A (resistive load) at 250 VAC, DPDT x 1.
- Output status can be monitored using LED indicator.
- Ideal to prevent reverse operation of motors.

⚠ Refer to *Safety Precautions* on page 9.
Refer to page 8 for commonly asked questions.

For the most recent information on models that have been certified for safety standards, refer to your OMRON website.

Ordering Information

List of Models

Function	Rated input voltage*	Relay output	Model
Phase sequence and phase loss monitoring	3-phase, 3-wire 200 to 480 VAC	DPDT ×1	**K8AK-PH1**

* The power supply voltage is the same as the rated input voltage.

Ratings and Specifications

Ratings

Rated input voltage		3-phase, 200 to 480 VAC (3-wire)
Input load		Approx. 4.1 VA
Operating time	**Phase sequence**	0.1 s±0.05 s
	Phase loss	0.1 s max. (when the voltage changes rapidly from 100% to 0% of rated voltage)
Reset method		Automatic reset
Indicators		Power (PWR): Green, Relay output (RY): Yellow
Output relays		One DPDT relay (NC operation)
Output relay ratings		Rated load Resistive load 5 A at 250 VAC 5 A at 30 VDC Minimum load: 24 VDC, 4 mA (reference values) Mechanical life: 10 million operations min. Electrical life: 5 A at 250 VAC or 30 VDC: 50,000 operations 3 A at 250 VAC/30 VDC:100,000 operations 1 A, cos θ = 0.4 at 250 VAC: 100,000 operations 0.2 A, L/R = 100 ms at 48 VDC: 12,000 operations Recommended fuse: NT00-6A
Rated operating voltage (Ue) **Rated operating current (Ie)**		AC-12 Ue:250VAC, Ie:5 A AC-15 Ue:250VAC, Ie:1 A DC-12 Ue:30VDC, Ie:5 A DC-13 Ue:24VDC, Ie:0.9 A DC-13 Ue:48VDC, Ie:0.2 A DC-13 Ue:24VDC, Ie:0.05 A
Ambient operating temperature		–20 to 60°C (with no condensation or icing)
Storage temperature		–25 to 65°C (with no condensation or icing)
Ambient operating humidity		25% to 85% (with no condensation)
Storage humidity		25% to 85% (with no condensation)
Altitude		2,000 m max.
Terminal screw tightening torque		0.49 to 0.59 N·m
Terminal wiring method		Recommended wire Solid wire: 2.5 mm^2 Twisted wires: AWG16, AWG18 **Note: 1.** Ferrules with insulating sleeves must be used with twisted wires. **2.** Two wires can be twisted together. Recommended ferrules AI 1,5-8BK (for AWG16) manufactured by Phoenix Contact AI 1-8RD (for AWG18) manufactured by Phoenix Contact AI 0,75-8GY (for AWG18) manufactured by Phoenix Contact
Case color		N1.5
Case material		PC and ABS, UL 94 V-0
Weight		Approx. 130 g
Mounting		Mounts to DIN Track.
Dimensions		22.5 × 90 × 100 mm (W×H×D)

Specifications

Allowable operating voltage range		85% to 110% of rated input voltage
Input voltage range		200 to 480 VAC
Input frequency		50/60 Hz (no presumed range)
Overload capacity		Continuous 528 V
Phase loss detection level		80%±10% of rated input Calculation Formula = 1 – ((Highest phase-to-phase voltage – Lowest phase-to-phase voltage)/Average three-phase phase-to-phase voltage)
Applicable standards	**Conforming standards**	EN 60947-5-1 Installation environment (pollution level 2, installation category III)
	EMC	EN 60947-5-1
	Safety standards	UL 508 (Recognition), Korean Radio Waves Act (Act 10564)*, CSA: C22.2 No.14*, CCC: GB/T 14048.5*
Insulation resistance		20 MΩ min. Between external terminals and case Between input terminals and output terminals
Rated insulation voltage		690 V
Dielectric strength		2,000 VAC for one minute Between external terminals and case Between input terminals and output terminals
Rated impulse withstand voltage		6 kV
Noise immunity		1,500 V power supply terminal common/normal mode Square-wave noise of ±1 μs/100 ns pulse width with 1-ns rise time
Vibration resistance		Frequency: 10 to 55 Hz, 0.35-mm single amplitude 10 sweeps of 5 min each in X,Y, and Z directions
Shock resistance		100 m/s^2, 3 times each in 6 directions along 3 axes
Degree of protection		IP40 (Terminals: IP20)
Conditional short-circuit current		1,000 A

* Products manufactured in Indonesia (for the North America, Southeast Asia, and India regions) do not carry CSA, KC, or CCC certification. Applicable products can be identified by the suffix "HI" at the end of the Lot No.

Individual Packaging Label

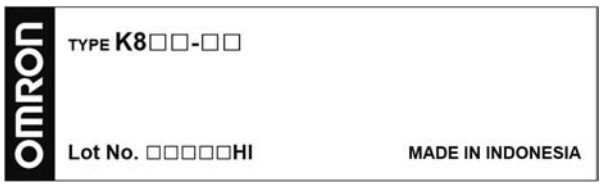

Product Label

●Relationship of Mounting Distance between K8AK-PH Relays and Ambient Temperature (Reference Values)

The following diagram shows the relationship between the mounting distances and the ambient temperature.
If the relay is used with an ambient temperature that exceeds these values, the temperature of the K8AK may rise and shorten the life of the internal components.

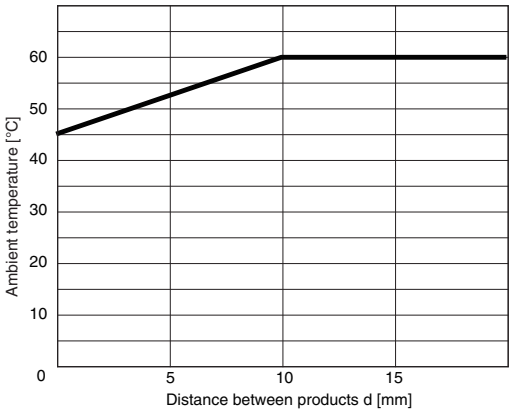

Test method

Sample: K8AK-PH
Mounting distances: 0, 5, and 10 mm min.

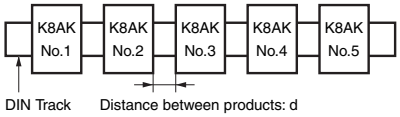

Connections

Terminal Diagram

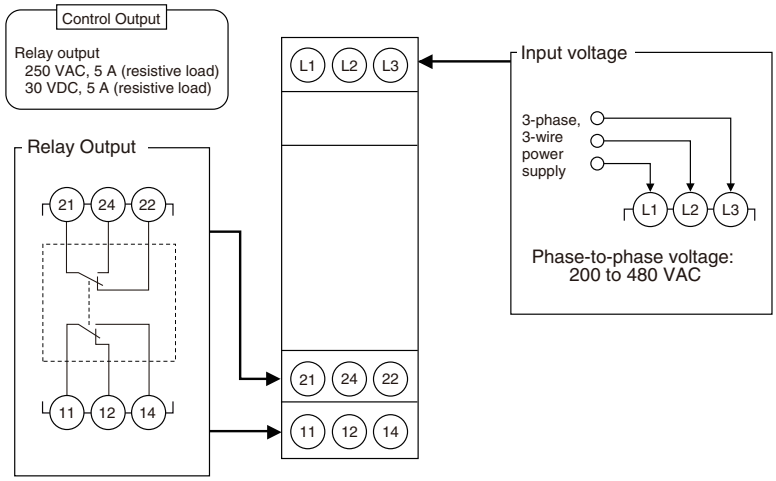

Note: 1. Use the recommended ferrules if you use twisted wires.

Wiring Example

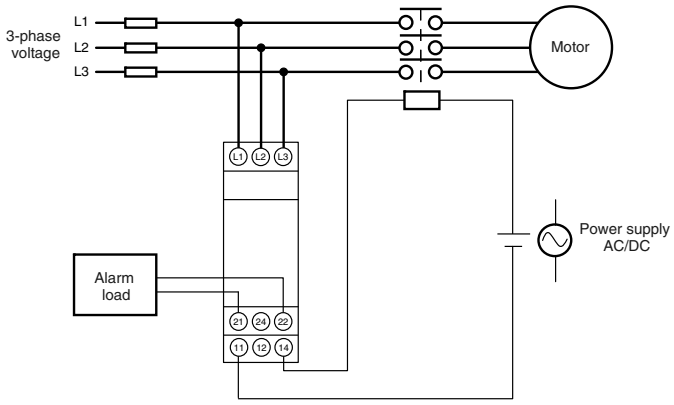

Timing Charts

●Phase Sequence and Phase Loss Operation Diagram

Note: 1. The K8AK-PH1 output contacts are normally operative.
2. The Relay will not operate if the input voltage drops below 70% of the minimum input value because L1 and L2 are also used to provide power.
3. Phase loss cannot be detected on the load side because this detection is based on the voltage.

Nomenclature

Front

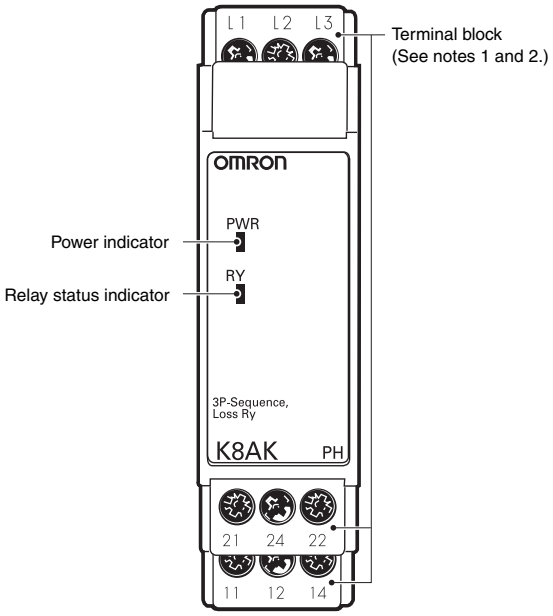

●Indicators

Item	Meaning
Power indicator (PWR: Green)	Lit when power is being supplied ✻3.
Relay status indicator (RY: Yellow)	Lit when relay is operating (normally lit).

* The input across L1 and L2 is used for the internal power supply. Therefore, the power indicator will not be lit if there is no input across L1 and L2.

Note: 1. Use either a solid wire of 2.5 mm^2 maximum or a ferrule with insulating sleeve for the terminal connection.
The length of the exposed current-carrying part inserted into the terminal must be 8 mm or less to maintain dielectric strength after connection.

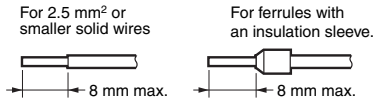

Recommended ferrules
Phoenix Contact
- AI 1,5-8BK (for AWG16)
- AI 1-8RD (for AWG18)
- AI 0,75-8GY (for AWG18)

2. Tightening torque: 0.49 to 0.59 N·m
3. The terminal screw is a Pozidriv screw.

Operation Methods

Connections

●Input

Connect using L1, L2, and L3.
Make sure the phase sequence is wired correctly. The Unit will not operate normally if the phase sequence is incorrect.

●Outputs

2c output terminals (11, 12, 14/21, 22, 24 terminals).

* When using stranded wire, please use the recommended bar terminal.

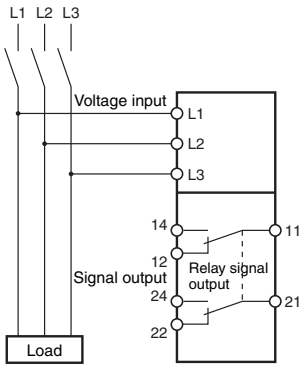

Dimensions

(Unit: mm)

Three-phase Phase-sequence Phase-loss Relay

K8AK-PH1

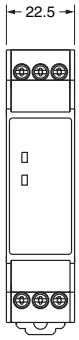

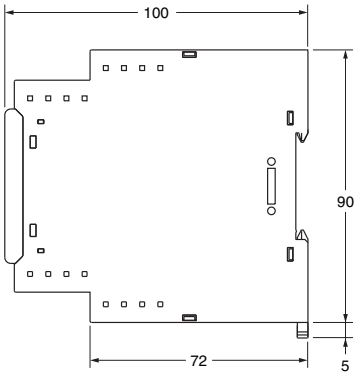

Optional Parts for DIN Track Mounting

●DIN Tracks

PFP-100N
PFP-50N

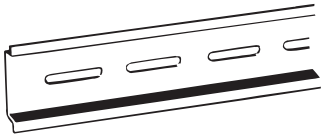

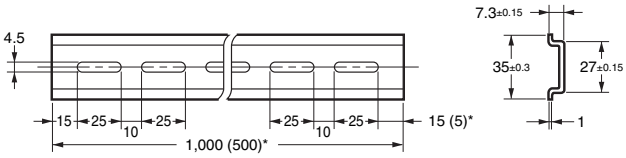

*Dimensions in parentheses are for the PFP-50N.

Questions and Answers

Q **Checking Operation**

A Phase Sequence
Switch the wiring, as shown by the dotted lines in the connection diagram, to reverse the phase sequence and check that the K8AK operates.
Phase Loss
Create a phase loss for any input phase and check that the K8AK operates.

Connection Diagram

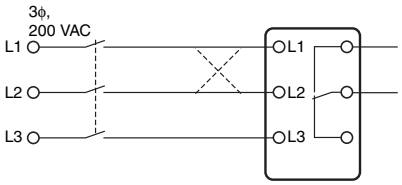

Q **Can phase loss be detected on the load side?**

A In principle, phase loss cannot be detected on the load side because the K8AK-PH measures three-phase voltage to determine phase loss.

Q **Is it possible to detect phase losses for motor loads while the motor is operating?**

A Phase loss can be detected while the motor is operating. However, the detection conditions depend on the load conditions that are shown in the following figure. Understand these characteristics when using this feature.

Normally, three-phase motors will continue to rotate even if one phase is open. The three-phase voltage will be induced at the motor terminals. The diagram shows voltage induction at the motor terminals when phase R has been lost with a load applied to a three-phase motor. The horizontal axis shows the motor load as a percentage of the rated load, and the vertical axis shows voltage as a percentage of the rated voltage. The solid line in the graph shows the voltage that is induced at the motor terminals when a phase loss occurs while the motor is operating under various loads. The figure below shows how a phase loss that occurs while the motor is operating causes an imbalance in the voltage across each motor terminal. The K8AK-PH detects phase loss when the motor is operating when the voltage is unbalanced. (Detection occurs when the imbalance is 80% of the maximum phase). The K8AK-PH cannot detect phase loss with light motor loads because the voltage imbalance is too small. The detectable range is shown by the diagonal lines.

Characteristic Curve Diagram

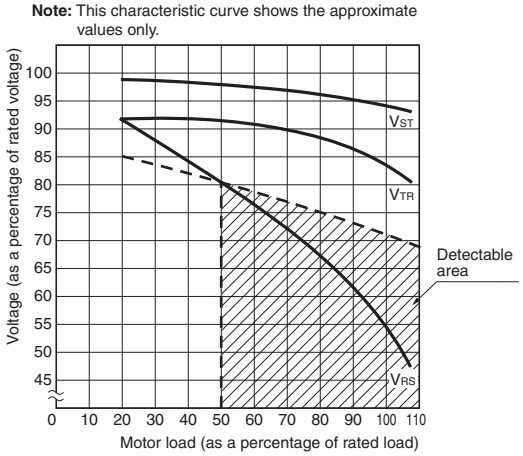

Note: For phase loss of phase R. V_{ST}, V_{TR}, and V_{RS} indicate the motor terminal voltage at phase loss.

Safety Precautions

Be sure to read the precautions for all models in the website at the following URL: http://www.ia.omron.com/.

Warning Indications

WARNING	Indicates a potentially hazardous situation which, if not avoided, will result in minor or moderate injury, or may result in serious injury or death. Additionally there may be significant property damage.
CAUTION	Indicates a potentially hazardous situation which, if not avoided, may result in minor or moderate injury or in property damage.
Precautions for Safe Use	Supplementary comments on what to do or avoid doing, to use the product safely.
Precautions for Correct Use	Supplementary comments on what to do or avoid doing, to prevent failure to operate, malfunction, or undesirable effects on product performance.

Meaning of Product Safety Symbols

	Used to warn of the risk of electric shock under specific conditions.
	Used for general prohibitions for which there is no specific symbol.
	Used to indicate prohibition when there is a risk of minor injury from electrical shock or other source if the product is disassembled.
	Used for general mandatory action precautions for which there is no specified symbol.

WARNING

Electrical shock may occasionally cause serious injury. Confirm that the input voltage is OFF before starting any wiring work and wire all connections correctly.

CAUTION

Electrical shock may cause minor injury.
Do not touch terminals while electricity is being supplied.

There is a risk of minor electrical shock, fire, or device failure. Do not allow any pieces of metal, conductors, or cutting chips that occur during the installation process to enter the product.

Explosions may cause minor injuries. Do not use the product in locations with inflammable or explosive gases.

There is a risk of minor electrical shock, fire, or device failure. Do not disassemble, modify, repair, or touch the inside of the product.

Loose screws may cause fires. Tighten terminal screws to the specified torque of 0.49 to 0.59 N·m.

Use of excessive torque may damage the terminal screws. Tighten terminal screws to the specified torque of 0.49 to 0.59 N·m.

Use of the product beyond its life may result in contact welding or burning. Make sure to consider the actual operating conditions and use the product within its rated load and electrical life count. The life of the output relay varies significantly with the switching capacity and switching conditions.

Precautions for Safe Use

1. Do not use or store the product in the following locations.
   - Locations subject to water or oil
   - Outdoor locations or under direct sunlight
   - Locations subject to dust or corrosive gases (particularly sulfurizing gases, ammonia, etc.)
   - Locations subject to rapid temperature changes
   - Locations prone to icing and dew condensation
   - Locations subject to excessive vibration or shock
   - Locations subject to wind and rain
   - Locations subject to static electricity and noise
   - Habitats of insects or small animals
2. Use and store the product in a location where the ambient temperature and humidity are within the specified ranges. If applicable, provide forced cooling.
3. Mount the product in the correct direction.
4. Do not wire the input and output terminals incorrectly.
5. Make sure the input voltage and loads are within the specifications and ratings for the product.
6. Make sure the crimp terminals for wiring are of the specified size.
7. Do not connect anything to terminals that are not being used.
8. Use a power supply that will reach the rated voltage within 1 second after the power is turned ON.
9. Keep wiring separate from high voltages and power lines that draw large currents.
   Do not place product wiring in parallel with or in the same path as high-voltage or high-current lines.
10. Do not install the product near equipment that generates high frequencies or surges.
11. The product may cause incoming radio wave interference. Do not use the product near radio wave receivers.
12. Install an external switch or circuit breaker and label it clearly so that the operator can quickly turn OFF the power supply.
13. Make sure the indicators operate correctly. Depending on the application environment, the indicators may deteriorate prematurely and become difficult to see.
14. Do not use the product if it is accidentally dropped. The internal components may be damaged.
15. Be sure you understand the contents of this catalog and handle the product according to the instructions provided.
16. Do not install the product in any way that would place a load on it.
17. When discarding the product, properly dispose of it as industrial waste.
18. The product must be handled only by trained electrician.
19. Prior to operation, check the wiring before you supply power to the product.
20. Do not install the product immediately next to heat sources.
21. Perform periodic maintenance.
22. Transient surge suppression shall be installed on the line side of this equipment and shall be rated 600 V (phase-to-ground), suitable for Overvoltage Category II, and shall provide protection for a rated impulse withstand voltage peak of 4 kV or equivalent.

Precautions for Correct Use

Observe the following operating methods to prevent failure and malfunction.

1. Use the input power and other power supplies and converters with suitable capacities and rated outputs.
2. The distortion in the input waveform must be 30% max. If the input waveform is distorted beyond this level, it may cause unnecessary operation.
3. The product cannot be used for thyristor control or on the secondary side of an inverter. To use the product on the primary side of an inverter, install a noise filter on the primary side of the inverter.
4. Phase loss is detected only when the power supply to the motor is turned ON. Phase loss during motor operation is not detected.
5. When cleaning the product, do not use thinners or solvents. Use commercial alcohol.

Correct Mounting Direction, Mounting, and Removing

- Mounting to DIN Track
  1. Attach the product to the DIN Track with the tab at the top and the hooks at the bottom.
  2. Push the product onto the Track until the hooks lock into place.

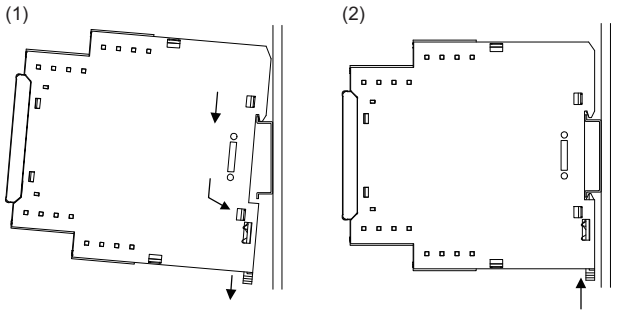

- Removing from the DIN Track
  Pull down on the bottom hook with a flat-blade screwdriver and lift up on the product.

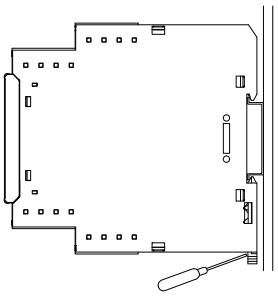

Applicable DIN Tracks:
PFP-100N (100 cm)
PFP-50N (50 cm)

Terms and Conditions Agreement

Read and understand this catalog.

Please read and understand this catalog before purchasing the products. Please consult your OMRON representative if you have any questions or comments.

Warranties.

(a) Exclusive Warranty. Omron's exclusive warranty is that the Products will be free from defects in materials and workmanship for a period of twelve months from the date of sale by Omron (or such other period expressed in writing by Omron). Omron disclaims all other warranties, express or implied.

(b) Limitations. OMRON MAKES NO WARRANTY OR REPRESENTATION, EXPRESS OR IMPLIED, ABOUT NON-INFRINGEMENT, MERCHANTABILITY OR FITNESS FOR A PARTICULAR PURPOSE OF THE PRODUCTS. BUYER ACKNOWLEDGES THAT IT ALONE HAS DETERMINED THAT THE PRODUCTS WILL SUITABLY MEET THE REQUIREMENTS OF THEIR INTENDED USE.

Omron further disclaims all warranties and responsibility of any type for claims or expenses based on infringement by the Products or otherwise of any intellectual property right. (c) Buyer Remedy. Omron's sole obligation hereunder shall be, at Omron's election, to (i) replace (in the form originally shipped with Buyer responsible for labor charges for removal or replacement thereof) the non-complying Product, (ii) repair the non-complying Product, or (iii) repay or credit Buyer an amount equal to the purchase price of the non-complying Product; provided that in no event shall Omron be responsible for warranty, repair, indemnity or any other claims or expenses regarding the Products unless Omron's analysis confirms that the Products were properly handled, stored, installed and maintained and not subject to contamination, abuse, misuse or inappropriate modification. Return of any Products by Buyer must be approved in writing by Omron before shipment. Omron Companies shall not be liable for the suitability or unsuitability or the results from the use of Products in combination with any electrical or electronic components, circuits, system assemblies or any other materials or substances or environments. Any advice, recommendations or information given orally or in writing, are not to be construed as an amendment or addition to the above warranty.

See http://www.omron.com/global/ or contact your Omron representative for published information.

Limitation on Liability; Etc.

OMRON COMPANIES SHALL NOT BE LIABLE FOR SPECIAL, INDIRECT, INCIDENTAL, OR CONSEQUENTIAL DAMAGES, LOSS OF PROFITS OR PRODUCTION OR COMMERCIAL LOSS IN ANY WAY CONNECTED WITH THE PRODUCTS, WHETHER SUCH CLAIM IS BASED IN CONTRACT, WARRANTY, NEGLIGENCE OR STRICT LIABILITY.

Further, in no event shall liability of Omron Companies exceed the individual price of the Product on which liability is asserted.

Suitability of Use.

Omron Companies shall not be responsible for conformity with any standards, codes or regulations which apply to the combination of the Product in the Buyer's application or use of the Product. At Buyer's request, Omron will provide applicable third party certification documents identifying ratings and limitations of use which apply to the Product. This information by itself is not sufficient for a complete determination of the suitability of the Product in combination with the end product, machine, system, or other application or use. Buyer shall be solely responsible for determining appropriateness of the particular Product with respect to Buyer's application, product or system. Buyer shall take application responsibility in all cases.

NEVER USE THE PRODUCT FOR AN APPLICATION INVOLVING SERIOUS RISK TO LIFE OR PROPERTY OR IN LARGE QUANTITIES WITHOUT ENSURING THAT THE SYSTEM AS A WHOLE HAS BEEN DESIGNED TO ADDRESS THE RISKS, AND THAT THE OMRON PRODUCT(S) IS PROPERLY RATED AND INSTALLED FOR THE INTENDED USE WITHIN THE OVERALL EQUIPMENT OR SYSTEM.

Programmable Products.

Omron Companies shall not be responsible for the user's programming of a programmable Product, or any consequence thereof.

Performance Data.

Data presented in Omron Company websites, catalogs and other materials is provided as a guide for the user in determining suitability and does not constitute a warranty. It may represent the result of Omron's test conditions, and the user must correlate it to actual application requirements. Actual performance is subject to the Omron's Warranty and Limitations of Liability.

Change in Specifications.

Product specifications and accessories may be changed at any time based on improvements and other reasons. It is our practice to change part numbers when published ratings or features are changed, or when significant construction changes are made. However, some specifications of the Product may be changed without any notice. When in doubt, special part numbers may be assigned to fix or establish key specifications for your application. Please consult with your Omron's representative at any time to confirm actual specifications of purchased Product.

Errors and Omissions.

Information presented by Omron Companies has been checked and is believed to be accurate; however, no responsibility is assumed for clerical, typographical or proofreading errors or omissions.

Note: Do not use this document to operate the Unit.

OMRON Corporation **Industrial Automation Company**

Kyoto, JAPAN **Contact : www.ia.omron.com**

Regional Headquarters

OMRON EUROPE B.V.
Wegalaan 67-69, 2132 JD Hoofddorp
The Netherlands
Tel: (31) 2356-81-300 Fax: (31) 2356-81-388

OMRON ELECTRONICS LLC
2895 Greenspoint Parkway, Suite 200
Hoffman Estates, IL 60169 U.S.A.
Tel: (1) 847-843-7900 Fax: (1) 847-843-7787

OMRON ASIA PACIFIC PTE. LTD.
438B Alexandra Road, #08-01/02 Alexandra
Technopark, Singapore 119968
Tel: (65) 6835-3011 Fax: (65) 6835-3011

OMRON (CHINA) CO., LTD.
Room 2211, Bank of China Tower,
200 Yin Cheng Zhong Road,
PuDong New Area, Shanghai, 200120, China
Tel: (86) 21-6023-0333 Fax: (86) 21-5037-2388

Authorized Distributor:

©OMRON Corporation 2014-2026 All Rights Reserved.
In the interest of product improvement,
specifications are subject to change without notice.

CSM_3_7

Cat. No. N183-E1-04 1026 (0314)