OMRON

Programmable Controller CS1

Replace Guide
From CS1G/H to CJ3/CJ2

CJ3M-CPU1□
CJ2H-CPU6□-(EIP)
CJ2M-CPU1□
CS1H-CPU6□H
CS1G-CPU4□H

Replace
Guide

P164-E1-04

Terms and Conditions Agreement

Thank you for your usage of products of Omron Corporation (“Omron”). Without any special agreements, these terms and conditions shall apply to all transactions regardless of who sells.

- Definitions of Terms

Omron product(s): Omron’s factory automation system devices, general control devices, sensing devices, and electronic/mechanical components.

- Catalogs: Any and all catalogs (including “Best Components” and other catalogs), specifications, instructions and manuals relating to Omron products, including electronically provided data.
- Conditions: Use conditions, rating, performance, operating environment, handling procedure, precautions and/or prohibited use of Omron products described in the catalogs.
- User application(s): Application of Omron products by a customer, including but not limited to embedding/using Omron products into customer’s components, electronic circuit boards, devices, equipment or systems.
- Conformity: (a) conformity, (b)performance, (c) no infringement of intellectual property of third party, (d) compliance with laws and regulations, and (e) conformity to various standards of Omron products in user applications.

- Note about Descriptions

- Rating and performance is tested separately. Combined conditions are not warranted.
- Reference data is intended to be used just for reference. Omron does NOT guarantee that the Omron Product can work properly in the range of reference data.
- Examples are intended for reference. Omron does not warrant the conformity in usage of the examples.
- Omron may discontinue Omron products or change specifications of them because of improvements or other reasons.

- Note about Use

Adopt and use Omron products considering the following cautions.

- Use the product in conformance to the conditions, including rating and performance.
- Check the conformity and decide whether or not Omron products are able to be adopted. Omron makes no guarantees about the conformity.
- Make sure in advance that electricity is properly supplied to Omron products and they are set up rightly in your system for intended use.
- When you use Omron products, ensure the followings: (i) allowance in aspect of rating and performance, (ii) safety design which can minimize danger of the application when the product does not work properly, (iii) systematic safety measures to notify danger to users, and (iv) periodical maintenance of Omron products and the user application.

- Omron assumes no responsibility for any direct or indirect loss, damage and expense resulting from infection of our products, installed software, any computer devices, computer programs, network, and databases with the followings: DDoS attack (distributed DoS attack); computer virus and other technically harmful program; and unauthorized access.
  Please conduct the followings by yourself: (i) antivirus software, (ii) data input/output, (iii) lost data recovery, (iv) protections against computer virus that contaminate Omron products or the installed software, and (v) measures to protect Omron products from unauthorized access.
- Omron products are designed and manufactured as commodity for general industrial products. For this reason, the usages (a) to (d) are to be unintended. Omron makes no guarantees on Omron products, if you use Omron products for those purposes. However, special applications that Omron expects or usages with especial agreement are excluded.
  (a) Applications requiring high-level safety (e.g. nuclear control facilities, combustion facilities, aerospace and aviation facilities, railroad facilities, elevating facilities, amusement facilities, medical facilities, safety devices or other applications which has possibility to influence lives or bodies)
  (b) Applications requiring high reliability (e.g. gas/water/electricity supply system, 24-hour operating system, applications handling with rights/property, such as payment system)
  (c) Applications in a harsh condition or environment (e.g. outdoor facilities, facilities with potential of chemical contamination or electromagnetic interference, facilities with vibration or impact, facilities on continual operation for a long period).
  (d) Applications under conditions or environment which are not described in the catalogs
- Omron products in the catalogs are not intended to be used in automotive applications (including two-wheel vehicles). Please DO NOT use Omron products in automotive applications. Contact our sales personnel for automotive products.

● Warranty

Warranty of Omron products is subject to followings.

- Warranty Period: One year after your purchase.
  However, except when there is a separate statement in the catalogs.
- Coverage: Omron will provide one of the services listed below, on the basis of Omron's decision.
  (a) Free repairing of the malfunctioning Omron products (except electronic/mechanical components) at Omron maintenance service sites.
  (b) Free replacement of the malfunctioning Omron products with the same number of substitutes.
- Exceptions: This warranty does not cover malfunctions caused by any of the followings.
  (a) Usage in the manner other than its original purpose
  (b) Usage out of the conditions
  (c) Usage out of Note about Use in these conditions
  (d) Remodeling/repairing by anyone except Omron
  (e) Software program by anyone except Omron
  (f) Causes which could not be foreseen by the level of science and technology at the time of shipment of the products.
  (g) Causes outside Omron or Omron products, including force majeure such as disasters

- Limitation of Liability

  The warranty described in this Terms and Conditions Agreements is a whole and sole liability for Omron products. There are no other warranties, expressed or implied.
  Omron and its distributors are not liable for any damages arisen from or relating to Omron products.

- Export Control

  Customers of Omron products shall comply with all applicable laws and regulations of other relevant countries regarding security export control, in exporting Omron products and/or technical documents or in providing such products and/or documents to a non-resident.
  Omron products and/or technical documents may not be provided to customers if they violate the laws and regulations.

EtherNet/IP™, DeviceNet™ and CompoNet™ are trademarks of ODVA.
Other company names and product names in this document are the trademarks or registered trademarks of their respective companies.

Related Manuals

Manual No.	Manual
W339	CS-series Programmable Controllers Operation Manual
W394	CS-series Programmable Controllers Programming Manual
W664	CJ-series CJ3 CPU Unit Hardware User's Manual
W472	CJ-series CJ2 CPU Unit Hardware User's Manual
W473	CJ-series CJ2/CJ3 CPU Software User's Manual
W474	CS/CJ/NSJ-series Instructions Reference Manual
W446	CX-Programmer Operation Manual
W447	CX-Programmer Operation Manual Function Blocks / Structured Text
W366	CS/CJ/CP/NSJ-series CX-Simulator Operation Manual
P172	CS/CJ-Series Expansion Interconnection Function User Guide

Replacement Guide

From CS1G/H to CJ3/CJ2

Table of Contents

1. Work Flow 3
2. Differences in Main Specifications 4
3. Selecting Models 6
4. Reading Data from CS Series 8
5. Converting and Modifying the Program for CJ Series 9
6. Writing Data to CJ Series 11
7. Phased Replacement Using CS/CJ Series Expansion Interconnection 13
8. Migrating the Special Unit Setup 16

Appendix 1. Specification Comparison between CS1 Series and CJ3/CJ2 Series 18
Appendix 2. Differences in Instructions 20
Appendix 3. Differences in I/O Memory 22
Appendix 4. Comparison of PLC Setup Settings 25
Appendix 5. Table of Input/Output Units 28
Appendix 6. Comparison of Special I/O Units 39
Appendix 6.1. CS1W-AD041-V1 39
Appendix 6.2. CS1W-AD081-V1 41
Appendix 6.3. CS1W-AD161 43
Appendix 6.4. CS1W-DA041 47
Appendix 6.5. CS1W-DA08V 49
Appendix 6.6. CS1W-DA08C 51
Appendix 6.7. CS1W-MAD44 53
Appendix 6.8. CS1W-PMV01 59
Appendix 6.9. CS1W-PMV02 62
Appendix 6.10. CS1W-PTS51 64
Appendix 6.11. CS1W-PTS55 67
Appendix 6.12. CS1W-PTS01-V1 74
Appendix 6.13. CS1W-PTS12 82
Appendix 6.14. CS1W-PTS52 99
Appendix 6.15. CS1W-PTS56 102
Appendix 6.16. CS1W-PTS02 108
Appendix 6.17. CS1W-PDC01 123
Appendix 6.18. CS1W-PDC11 126
Appendix 6.19. CS1W-PDC55 130
Appendix 6.20. CS1W-PTW01 133
Appendix 6.21. CS1W-SCU□1-V1/CS1W-SCB□1-V1 136
Appendix 6.22. CS1W-CT021/041 142
Appendix 6.23. CS1W-NC4□3/2□3/1□3 146

Follow the below work flow to replace the Sysmac CS1 Series (CS1G/H) with the CJ3/CJ2 Series. Refer to the reference pages for details.

1. Work Flow

Reference pages

1) Preliminary steps: Take the following steps before starting the replacement work.

	Description	Reference pages
Start		
Selecting models	Select the Units, Programming Devices, and connecting cables to replace CS1 Series (CS1G/H) with CJ3/CJ2 Series. Read the recommended models and remarks in the reference pages and select the models.	*3. Selecting Models*
Preparing Units	Prepare the Units, Programming Devices, and connecting cables.	
Reading PLC data	Load the program, I/O Memory and other settings from CS1 Series (CS1G/H) with the necessary Programming Device and connecting cable.	*4. Reading Data from CS Series*
Converting and modifying data	Convert the data read from CS1 Series (CS1G/H) for CJ3/CJ2 Series. Most of the data can be automatically converted. However, some instructions and some Unit data cannot be converted. Refer to the details in *5. Converting and Modifying the Program for CJ Series* and modify the data and program separately.	*5. Converting and Modifying the Program for CJ Series*
Continue to actual replacement work		

2) Actual replacement work: Take the following steps to replace the CS1 Series (CS1G/H) with the CJ3/CJ2 Series.

	Description	Reference pages
Replacing Units	Install the prepared Units instead of CS1-series Units. *Refer to the *CJ-series CJ2 CPU Unit Hardware User's Manual* (Cat. No. W472) and *CJ3 CPU Unit Hardware User's Manual* (Cat. No. W664).	Related manuals
Wiring	Wiring for the installed Units. *Refer to the *CJ-series CJ2 CPU Unit Hardware User's Manual* (Cat. No. W472) and *CJ3 CPU Unit Hardware User's Manual* (Cat. No. W664) .	
Writing data to CJ	Transfer the converted data to the CJ3/CJ2 Series. To check the wiring, operate input and output bits to see if they operate correctly.	*6. Writing Data to CJ Series*
Checking operation	Turn ON the power and check the operation.	
Replacement completion		

1. If the Unit is operated between uploading the program and executing replacement work, data handled by the program may change. If so, upload the data right before the replacement work, modify data if necessary, and download it to the CJ3/CJ2 Series.
2. The cycle time of CS1 Series (CS1G/H) and CJ3/CJ2 Series are different, which may affect system operation. If so, it is necessary to adjust cycle time in the PLC Setup.

***Phased replacement of the CS1 Series with the CJ3/CJ2 Series is also possible. Refer to *7. Phased Replacement Using CS/CJ Series Expansion Interconnection*.**

2. Differences in Main Specifications

The table below describes the differences in main specifications between the CS1 Series and the CJ3/CJ2 Series. For details, refer to *Appendix 1. Specification Comparison between CS1 Series and CJ3/CJ2 Series*.

	CS1 Series	CJ3 Series	CJ2 Series	
		CJ3M	CJ2H	CJ2M
Maximum number of I/O points	5,120 points	5,120 points	2,560 points	
Program capacity	10k to 250k steps	5k to 100k steps 40k for FB program area	50k to 400k steps	5k to 60k steps 20k for FB program area
Data memory	32k words	32k words	32k words	32k words
EM	32k words x 13 banks max.	32k words x 10 banks max.	32k words x 25 banks max.	32k words x 4 banks max.
Programming language	Ladder Logic (LD) Sequential Function Chart (SFC) Structured Text (ST) Instruction List (IL)			
Instructions	Same (about 400 instructions)			
I/O memory	Same			
PLC Setup	Same			
Number of tasks	Cyclic tasks: 32 Interrupt tasks: 256	Cyclic tasks: 128 Interrupt tasks: 256		
Function blocks	Maximum number of definitions: 1,024 Maximum number of instances: 2,048	Maximum number of definitions: 1,024 Maximum number of instances: 2,048		
Instruction execution time	Basic instructions: 0.02 μs Special instructions: 0.06 μs	Basic instructions: 0.04 μs Special instructions: 0.06 μs	Basic instructions: 0.016 μs Special instructions: 0.048 μs	Basic instructions: 0.04 μs Special instructions: 0.06 μs
Overhead processing time	0.3 ms	0.16 ms	0.2 ms	0.16 ms
File memory	Same (Memory Card, EM file memory)			
Trace memory	4,000 words	220,000 words max.	32,000 words max.	8,000 words
Inner boards	1 Unit	Not provided		
Maximum number of mountable Units	Basic I/O Units: 80 Special I/O Units: 80 CPU Bus Units: 16	Basic I/O Units: 80 Special I/O Units: 80 CPU Bus Units: 16	Basic I/O Units: 40 Special I/O Units: 40 CPU Bus Units: 16	
Maximum number of Expansion Racks	7 max.	7 max.	3 max.	
Maximum total distance of expansion cables	Same (12 m max.)			
Long-distance Expansion Racks	50 m max.	Not provided		
Memory Cards	HMC-EF□□□	HMC-SD□□□	HMC-EF□□□	
Communications commands	Same (FINS commands and host link commands)			
Battery less I/O memory	Not supported	Supported	Not supported	
Battery	CS1W-BAT01	CJ1W-BAT01 (Sold separately)	CJ1W-BAT01	
Peripheral port	Dedicated peripheral port	USB		
Programming Devices	CX-Programmer Programming Console	CX-Programmer		
Unit connection	Mounting on the backplane	No backplane required (connection with connectors)		
Mounting	Mounting with screws or a DIN Track	Mounting on a DIN Track		

Reference

CS/CJ Series Expansion Interconnection enables the following functions on the CS1 CPU Units and CJ3/CJ2 CPU Units. Refer to *7. Phased Replacement Using CS/CJ Series Expansion Interconnection*.

- Connecting a CJ-series Expansion Rack to the CS1 Series
- Connecting a CS-series Expansion Rack to the CJ3/CJ2 Series
- Connecting four or more Expansion Racks to the CJ2 Series

CPU Unit models and specifications

<CS1H-H/CS1G-H CPU Units>

Model	Program capacity	Data memory and EM	Maximum number of mountable Units	Maximum number of I/O points	Instruction execution time LD instruction/MOV instruction	Maximum number of FB instances
CS1H-CPU67H	250k steps	DM + EM x 13 banks	80	5,120 points	20 ns/180 ns	2,048
CS1H-CPU66H	120k steps	DM + EM x 7 banks	80	5,120 points	20 ns/180 ns	2,048
CS1H-CPU65H	60k steps	DM + EM x 3 banks	80	5,120 points	20 ns/180 ns	2,048
CS1H-CPU64H	30k steps	DM + EM x 1 bank	80	5,120 points	20 ns/180 ns	2,048
CS1H-CPU63H	20k steps	DM + EM x 1 bank	80	5,120 points	20 ns/180 ns	256
CS1G-CPU45H	60k steps	DM + EM x 3 banks	80	5,120 points	40 ns/200 ns	2,048
CS1G-CPU44H	30k steps	DM + EM x 1 bank	80	1,280 points	40 ns/200 ns	2,048
CS1G-CPU43H	20k steps	DM + EM x 1 bank	80	960 points	40 ns/200 ns	256
CS1G-CPU42H	10k steps	DM + EM x 1 bank	80	960 points	40 ns/200 ns	256

<CJ3M CPU Units>

Model	Program capacity	Data memory and EM	Maximum number of mountable Units	Maximum number of I/O points	Instruction execution time LD instruction/MOV instruction	Maximum number of FB instances
CJ2M-CPU15	100k steps	DM + EM x 10 banks	80	5,120 points	40 ns/120 ns	2,048
CJ2M-CPU14	50k steps	DM + EM x 10 banks	80	5,120 points	40 ns/120 ns	2,048
CJ2M-CPU13	20k steps	DM + EM x 1 bank	80	5,120 points	40 ns/120 ns	2,048
CJ2M-CPU12	10k steps	DM + EM x 1 bank	80	5,120 points	40 ns/120 ns	2,048
CJ2M-CPU11	5k steps	DM + EM x 1 bank	80	5,120 points	40 ns/120 ns	2,048

<CJ2H/CJ2M CPU Units>

Model	Program capacity	Data memory and EM	Maximum number of mountable Units	Maximum number of I/O points	Instruction execution time LD instruction/MOV instruction	Maximum number of FB instances
CJ2H-CPU68	400k steps	DM + EM x 25 banks	40	2,560 points	16 ns/50 ns	2,048
CJ2H-CPU67	250k steps	DM + EM x 15 banks	40	2,560 points	16 ns/50 ns	2,048
CJ2H-CPU66	150k steps	DM + EM x 10 banks	40	2,560 points	16 ns/50 ns	2,048
CJ2H-CPU65	100k steps	DM + EM x 4 banks	40	2,560 points	16 ns/50 ns	2,048
CJ2H-CPU64	50k steps	DM + EM x 4 banks	40	2,560 points	16 ns/50 ns	256
CJ2M-CPU15	60k steps	DM + EM x 4 banks	40	2,560 points	40 ns/120 ns	2,048
CJ2M-CPU14	30k steps	DM + EM x 4 banks	40	2,560 points	40 ns/120 ns	2,048
CJ2M-CPU13	20k steps	DM + EM x 1 bank	40	2,560 points	40 ns/120 ns	256
CJ2M-CPU12	10k steps	DM + EM x 1 bank	40	2,560 points	40 ns/120 ns	256
CJ2M-CPU11	5k steps	DM + EM x 1 bank	40	2,560 points	40 ns/120 ns	256

3. Selecting Models

Outline of the system configuration

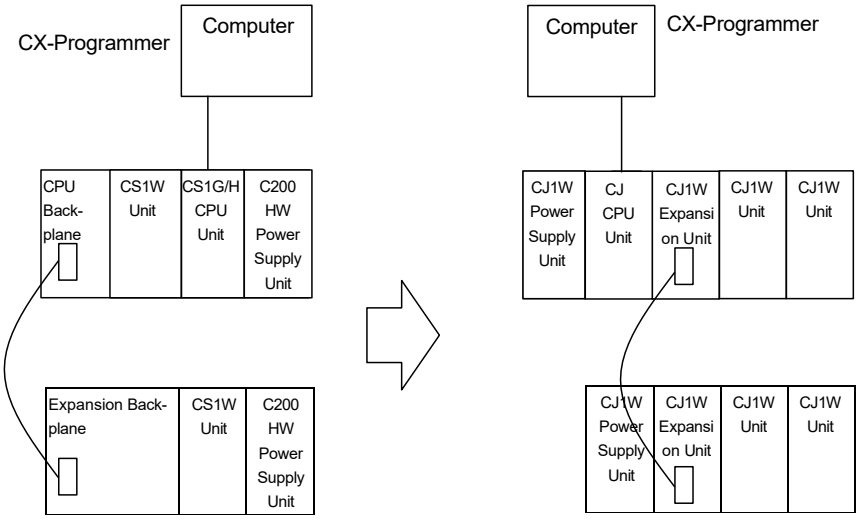

The table below shows the corresponding models between the CS Series and the CJ Series for each Unit.

Select a CJ-series Unit with the same or similar specifications as the CS-series Unit you are using.

Refer to the following manuals for details on each model.

CJ3 Series: CJ-series CJ3 CPU Unit Hardware User's Manual (Cat. No. W664)

CJ2 Series: CJ-series CJ2 CPU Unit Hardware User's Manual (Cat. No. W472)

CS1 Series: CS-series CS1G/H-CPU□□ Programmable Controllers Operation Manual (Cat. No. W339)

<CPU Racks>

Unit name	CS1 Series	CJ3/CJ2 Series	Remarks
CPU Units (*)	[CS1G] CS1G-CPU42H CS1G-CPU43H CS1G-CPU44H CS1G-CPU45H [CS1H] CS1H-CPU63H CS1H-CPU64H CS1H-CPU65H CS1H-CPU66H CS1H-CPU67H	[CJ3M] CJ3M-CPU11 CJ3M-CPU12 CJ3M-CPU13 CJ3M-CPU14 CJ3M-CPU15 [CJ2M] CJ2M-CPU11 CJ2M-CPU12 CJ2M-CPU13 CJ2M-CPU14 CJ2M-CPU15 [CJ2H] CJ2H-CPU64 CJ2H-CPU65 CJ2H-CPU66 CJ2H-CPU67 CJ2H-CPU68	Select an appropriate replacement CPU from the list of CPU Units in Chapter 2.
Backplanes (CPU Backplanes)	CS1W-BC023/BC022 CS1W-BC033/BC032 CS1W-BC053/BC052 CS1W-BC083/BC082 CS1W-BC103/BC102	Not required.	Backplanes are not required for the CJ Series.
Expansion Racks (I/O Control Units)	Not required.	CJ1W-IC101	Expansion Racks are required for expansion.
Long-distance Expansion Racks (I/O Control Units)	CS1W-IC102	Not supported.	The CJ3/CJ2 Series does not support long-distance Expansion Racks.
Memory Cards	HMC-EF□□□	CJ3: HMC-SD□□□ CJ2: HMC-EF□□□	The CJ3 CPU Unit is supported SD memory card.
Battery	CS1W-BAT01	CJ1W-BAT01	The battery for the CJ3M is sold separately.

(*) A built-in serial port has the same function. Refer to the related manuals for details on different specifications.

<I/O Expansion Racks>

Unit name	CS Series	CJ Series	Remarks
Backplanes (Expansion Backplanes)	CS1W-BI033/BI032 CS1W-BI053/BI052 CS1W-BI083/BI082 CS1W-BI103/BI102	Not required.	Backplanes are not required for the CJ Series.
Expansion Racks (I/O Interface Units)	Not required.	CJ1W-II101	Expansion Racks are required for expansion.
Expansion backplane connecting cables	CS-series Connecting Cables CS1W-CN313 (30 cm) CS1W-CN713 (70 cm) CS1W-CN223 (2 m) CS1W-CN323 (3 m) CS1W-CN523 (5 m) CS1W-CN133 (10 m) CS1W-CN133-B2-B2 (12 m) CS-series to C200H-series I/O Connecting Cables CS1W-CN311 (30 cm) CS1W-CN711 (70 cm) CS1W-CN221 (2 m) CS1W-CN321 (3 m) CS1W-CN521 (5 m) CS1W-CN131 (10 m) CS1W-CN131-B2 (12 m)	CS1W-CN313 (30 cm) CS1W-CN713 (70 cm) CS1W-CN223 (2 m) CS1W-CN323 (3 m) CS1W-CN523 (5 m) CS1W-CN133 (10 m) CS1W-CN133-B2 (12 m)	Connect the CPU Rack to an Expansion Rack or connect two Expansion Racks. The CS-series Cables are also available for the CJ Series.
Long-distance Expansion Racks (I/O Interface Units)	CS1W-II102	Not supported.	The CJ Series does not support long-distance Expansion Racks.
Long-distance expansion cables	CV500-CN□□2	Not supported.	The CJ Series does not support long-distance expansion cables.

<Power Supply Units>

Unit name	SYSMAC CS Series	CJ Series	Remarks
Power Supply Units (AC Power Supply Units)	C200HW-PA204	CJ1W-PA202	
	C200HW-PA204R C200HW-PA209R	CJ1W-PA205R	With RUN output
	C200HW-PA204C	CJ1W-PA205C	With replacement notification
	C200HW-PA204S	Not supported.	With service power supply
Power Supply Units (DC Power Supply Units)	C200HW-PD024 C200HW-PD025	CJ1W-PD022 CJ1W-PD025	CJ1W-PD022 is a non-isolated type.

<Basic I/O Units and CPU Bus Units>

Unit name	SYSMAC CS Series	CJ Series	Remarks
Basic I/O Units	CS1W-I□□□ CS1W-O□□□ CS1W-M□□□	CJ1W-I□□□ CJ1W-O□□□ CJ1W-M□□□	Refer to *Appendix 5. Table of Input/Output Units*.
Special I/O Units CPU Bus Units (Communications Units, Analog I/O Units, Process I/O Units and other Special I/O Units)	CS1W-□□□□	CJ1W-□□□□	Refer to *Appendix 5. Table of Input/Output Units*. Select the required models from the related manuals for various Special Units. There may be no Special Unit with the same function. In that case, consider using another Special Unit as an alternative.
Inner boards	CS1W-□□B	Not supported.	The CJ Series does not support inner boards. Consider replacing with a Special I/O Unit or a CPU Bus Unit.

<Support Software and peripheral devices>

Name	SYSMAC CS Series	CJ Series	Remarks
Support Software	CX-One	CX-One	
Programming Device Connecting Cable for peripheral (USB) port	CS1W-CN226/626 (2 m/6 m) CS1W-CIF31 (required for USB connection)	Commercially available USB cable	USB 2.0 cable CJ3 CPU Unit : Type C connector CJ2 CPU Unit : Type B connector
Programming Console	C200H-PRO27 (+C200H-CN□□2) CQM1-PRO01	Not supported.	A Programming Console cannot be used with the CJ Series. Use the CX-Programmer instead.

4. Reading Data from CS Series

Use the CX-Programmer to load the ladder program, PLC settings, and PLC memory data from the CS Series.

(1) Select **Work Online** from the PLC Menu to go online.

(2) Transfer the ladder program, PLC settings and I/O table. (Select **Transfer - From PLC** from the PLC Menu.)

Click the **OK** button to start transfer.

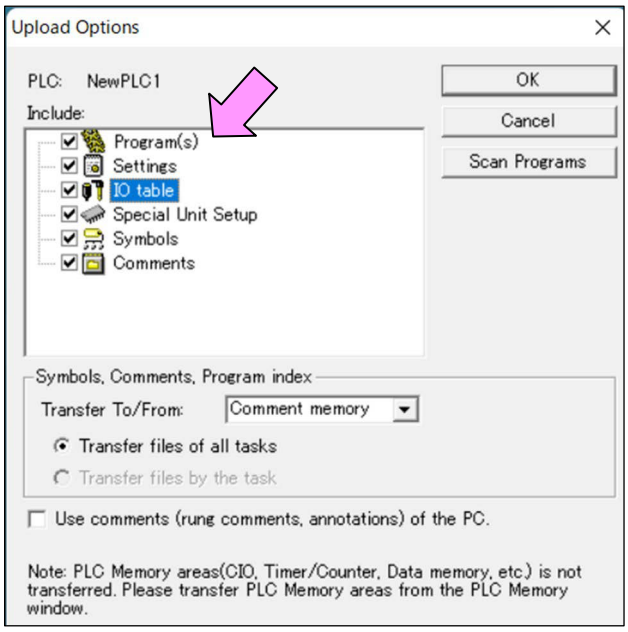

(3) Transfer the PLC memory data. (Select **Edit - Memory** from the PLC Menu.)

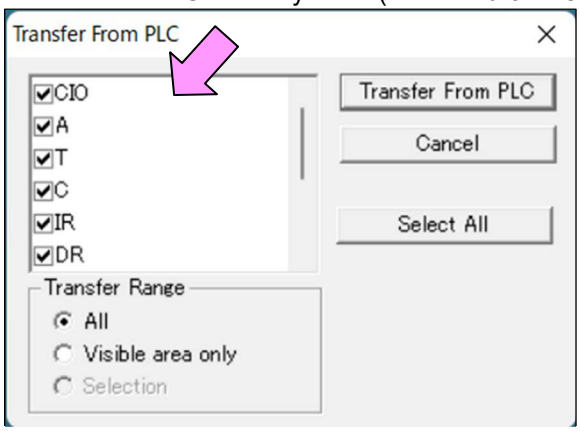

Scroll and select all areas. Click the **Transfer from PLC** button to start transfer.

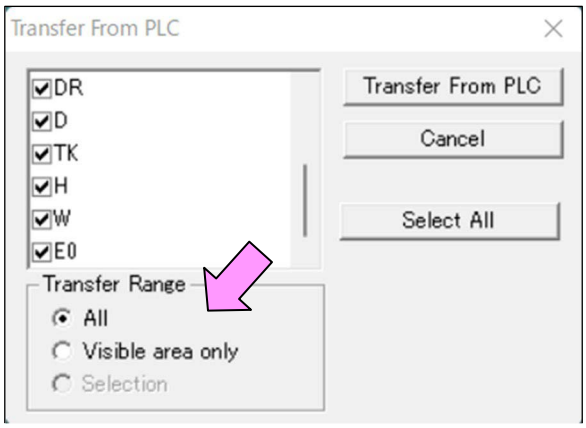

(4) Select **Work Online** from the PLC Menu to go offline.

(5) Save the file with a file name. (Select **Save As** from the File Menu.)

5. Converting and Modifying the Program for CJ Series

Convert and modify the program for the CJ Series on the CX-Programmer.

(1) Start the CX-Programmer and open the saved program file for the CJ Series. (Select **Open** from the File Menu.)

(2) Change the Device Type from CS Series to CJ3M, CJ2H or CJ2M. (Select **Change Model** from the PLC Menu to display the below dialog box.)

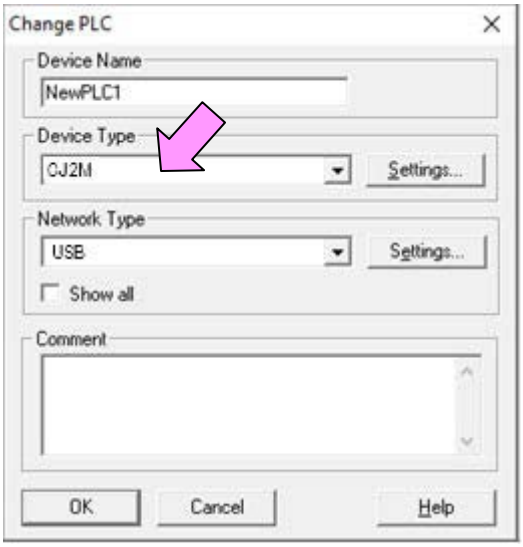

(3) The instructions are automatically converted. The conversion results are displayed in the Output window. Double-click an error displayed in the Output window to jump to the corresponding section of the ladder program.

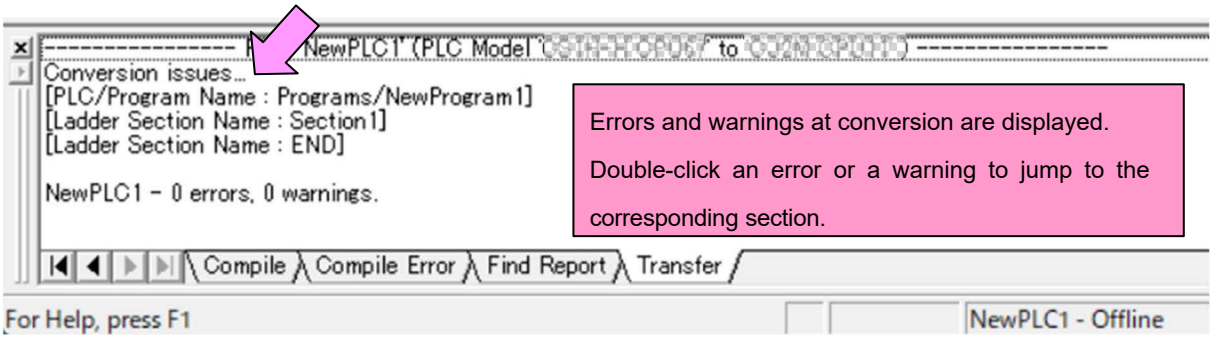

The following gives the program checks that are performed in the **Compile** tab page.

- Data undefined check (Is it established as a normal circuit?)
- Instruction existence check (Is it an instruction or operand that exists in the PLC?)
- Operand check (Is the operand within the operable range?)
- Program capacity check (Is it within the UM capacity of the target PLC model?)
- Syntax check (Is the ladder syntax correct?)
- Circuit shape check (Is the circuit shape appropriate?)
- Duplicated use check (A duplicated use check for an output.)
- Task-related check (A check related to the task.)

Some instructions cannot be converted. Refer to *Appendix 2. Differences in Instructions* and the *CS/CJ/NSJ Series Programmable Controllers Instructions Reference Manual* (Cat. No. W474) and modify the ladder program. You can check the program by selecting **Compile** from the Program Menu. Check results are displayed in the Output window.

(4) The I/O allocation of CS Series (CS1G/H) is partly different from that of CJ Series. Refer to *Appendix 3. Differences in I/O Memory* and modify the ladder program.

(5) The PLC settings of CS Series (CS1G/H) are partly different from those of CJ Series. Also, the PLC settings are initialized when the PLC model is changed. Refer to *Appendix 4. Comparison of PLC Settings* and change the PLC settings.

(6) I/O tables are initialized when the PLC model is changed. The CJ-series I/O tables can be automatically generated and operated based on the mounted Units. I/O tables can also be edited and set when I/O allocation needs to be changed in consideration of its effect on the ladder program.

(7) When replacing a CS-series Unit with a CJ-series Unit, the same unit number can be set to assign the same CIO Area and DM Area for the same Special I/O Unit or CPU Bus Unit.
Some data used by Special I/O Units and CPU Bus Units are set with the Support Software and stored in each Unit. In that case, it is necessary to use the Support Software to read data from the CS-series Unit and transfer it to the CJ-series Unit.
Refer to the manual for the specific Unit for details.

(8) Select **Compile** from the Program Menu to check the program. If an error is detected, correct it.

(9) Save the program with a new project name. (Select **Save As** from the File Menu.)

6. Writing Data to CJ Series

Transfer the converted and modified program, PLC settings, and data memory to the CJ Series.

Required items	Support Software (computer)	CX-One CXONE-AL□□C-V□/AL□□D-V□ (CX-Programmer)
	Connecting cable	Commercially available USB cable USB 2.0 cable CJ3 CPU Unit : Type C connector CJ2 CPU Unit : Type B connector

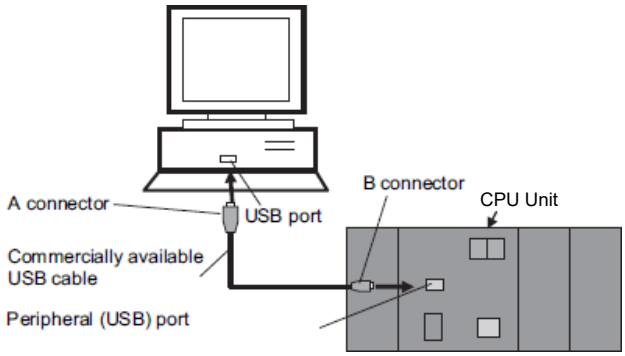

(1) Connect CJ3M/CJ2H/CJ2M with a computer.

(2) Start the CX-Programmer and open the converted and modified program file for the CJ Series.

(3) Connect online with CJ3M/CJ2H/CJ2M.

(4) Transfer the ladder program and PLC settings to CJ3M/CJ2H/CJ2M. (Select **Transfer - To PLC** from the PLC Menu.) Select the **Program(s)** and **Settings** check boxes. Click the **OK** button to start transfer.

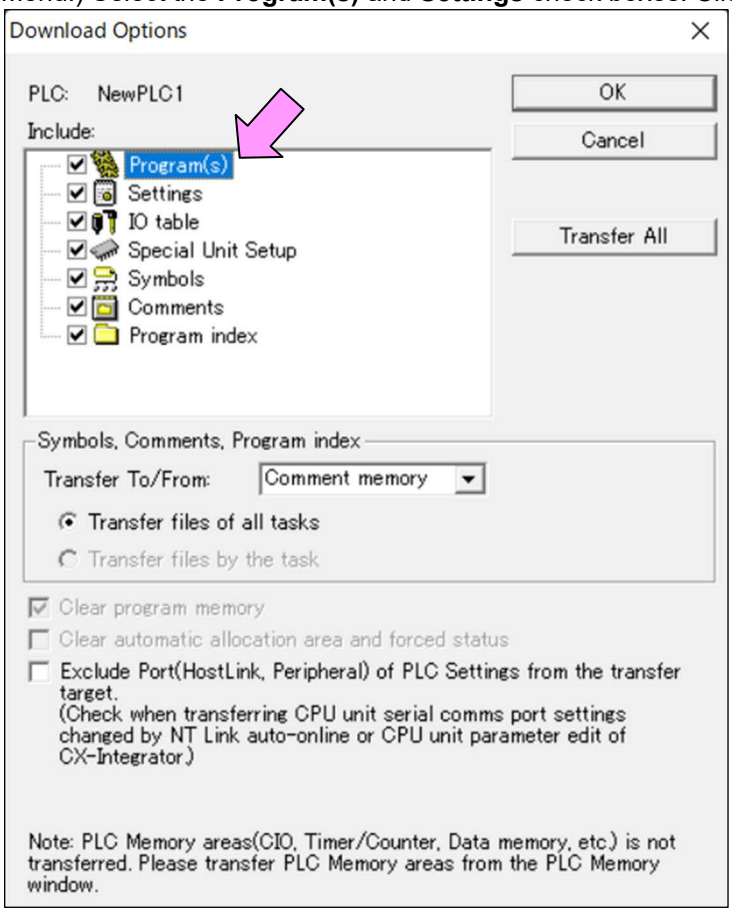

(5) Select **Edit - Memory** from the PLC Menu to display the below dialog box.

Select the PLC memory (Data Memory Area: D, Holding Area: HR, and EM Area) where initial values and setting data required for CJ3/CJ2 system operation are stored and click the **Transfer to PLC** button to start transfer.

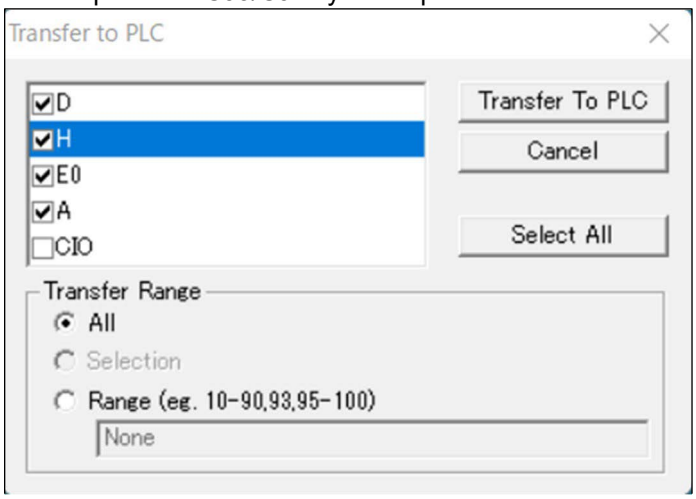

(6) Select **Work Online** from the PLC Menu to go offline.

(7) Test Run

Turn ON the power, perform a Test Run, and check the operation.

Precautions for Correct Use

After the replacement, be sure to check the operational safety by performing a Test Run or other operations before you start the system operation. Incorrect wiring or settings may cause the system to malfunction.

Cycle time may be shortened by changing to the CJ3/CJ2 Series. When you create a program that depends on the cycle time, check the operation after conversion. Use **Constant Cycle Time** in the PLC settings to make it the same as the CS Series.

7. Phased Replacement Using CS/CJ Series Expansion Interconnection

Phased replacement of the CS1 Series with the CJ3/CJ2 Series is possible by using CS/CJ Series Expansion Interconnection. Up to seven Expansion Racks can be connected to the CJ2 CPU Unit.

*This function works with the CS1 CPU Unit, CJ2M-CPU Unit Ver. 2.2 or later, CJ2H CPU Unit Ver. 1.6 or later (lot number 260105 or later), CJ3M CPU Unit all version and CX-One Ver.4.□ with auto-updates from January 2026 and later applied.

■ CS/CJ Series Expansion Interconnection Overview

CS/CJ Series Expansion Interconnection enables connecting a CJ-series Expansion Rack to the CS-series system configuration, or a CS-series Expansion Rack to the CJ-series system configuration. This function allows phased replacement of the CS-series system configuration with the CJ Series.

To use CS/CJ Series Expansion Interconnection, enable it in CX-One.

Application examples

- Before transitioning to the CJ3/CJ2 Series completely, phased replacement is performed using CS1W Units, since unit replacement from CS1 requires a lot of time and effort for design changes.
- Some units are replaced with CJ1W Units, as CS1W Units have been discontinued.
- Four or more Expansion Racks are required to replace the CS1 Series with the CJ2 Series.

Connecting a CJ-series Expansion Rack to the CS Series

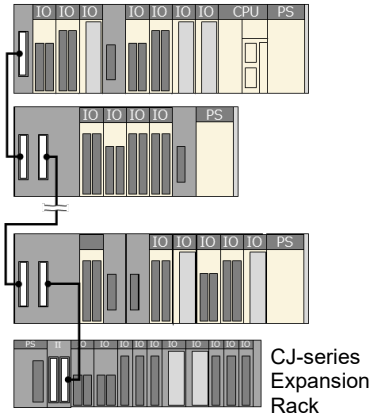

Connecting a CS-series Expansion Rack to the CJ Series

Connecting four or more Expansion Racks to the CJ2 Series

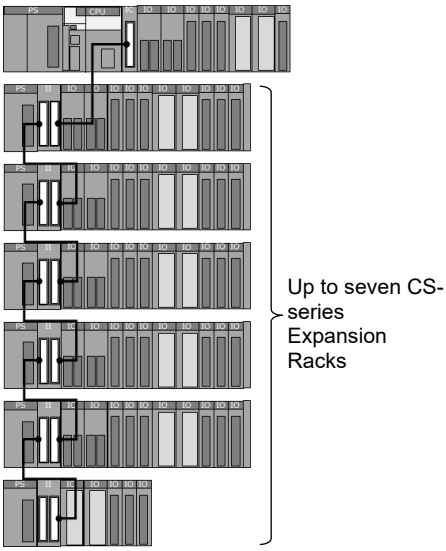

*Note that the following restrictions apply.

- When adding the CJ Series to the CS Series, connect it only downstream of the CS-series CPU Unit/Expansion Rack.
- When adding the CS Series to the CJ Series, connect it only downstream of the CJ-series CPU Unit/Expansion Rack.
- CS1 Long-distance Expansion Racks cannot be mixed.

For details, refer to the *CS/CJ-Series Expansion Interconnection Function User Guide* (Cat No. P172).

■ Specifications: When CS/CJ-Series Expansion Interconnection enabled

Item	CS1 CPU Unit	CJ3/CJ2 CPU Unit
Compatible CPU Units	CS1H-CPU6□H Ver. 4.0 or later CS1G-CPU4□H Ver. 4.0 or later (CS1D Series is incompatible.)	CJ3M-CPU□□ All Unit version CJ2M-CPU□□ Unit version Ver. 2.2 or later CJ2H-CPU6□（-EIP) Unit version Ver. 1.6 or later * Lot number 260105 or later only
Compatible CS-series Backplanes	CS1W CPU Backplanes CS1W-BC□□2 *CS1W-BC□□3 is incompatible. CS1W Expansion Backplanes CS1W-BI□□2 CS1W-BI□□3 *I/O Expansion Backplanes for C200H Series cannot be connected.	CS1W Expansion Backplanes CS1W-BI□□2 CS1W-BI□□3 *I/O Expansion Backplanes for C200H Series cannot be connected.
Compatible units	CS1W/CJ1W Basic I/O Units, Special I/O Units, and CPU Bus Units *C200H-series Units cannot be used.	
Maximum number of I/O points	5,120	5,120
Connectable number of units	10 per rack (CPU or expansion) 80 in the entire system	10 per rack (CPU or expansion) 80 in the entire system
Basic I/O Units	80 max. with 5,120 I/O points max. in total	80 max. with 5,120 I/O points max. in total
Special I/O Units	80 max. For up to 96 unit numbers	80 max. For up to 96 unit numbers
CPU Bus Units	16 max.	CJ3M-CPU1□, CJ2M-CPU1□ and CJ2H-CPU6□ 16 max. CJ2M-CPU3□. CJ2M -CPU3□ and CJ2H-CPU6□-EIP 15 max.
Maximum number of racks	7 max.	7 max.
Total length of I/O connecting cables	12 m max.	12 m max.
Compatible units	CS1W Units, CJ1W Units Some units are incompatible. Refer to the *CS/CJ-Series Expansion Interconnection Function User Guide* (Cat No. P172).	

■ CX-One versions, and functions usable after CS/CJ-Series Expansion Interconnection is enabled

- Compatible versions

  CX-One Ver.4.□ with auto-updates from January 2026 and later applied.

- Available functions

  The following become active in the I/O Table window.

  (1) Seven Expansion Racks can be displayed for CJ2 CPU.
  (2) CS1W Units can be displayed and selected for an Expansion Rack connected downstream of CJ3/CJ2 CPU. CJ1W Units can be displayed and selected for an Expansion Rack connected downstream of CS1 CPU.
  (3) I/O Table Checking allows detecting a mix of CS1W and CJ1W Units.
  (4) A CJ1W power supply and a C200HW power supply for CS1 can be selected in the Consumption window.

■ How to use CS/CJ-Series Expansion Interconnection

To use CS/CJ Series Expansion Interconnection, enable it with the Support Software.

How to enable

(1) Download [CsCJCrossRackSupportEnable.exe] from the Sysmac Studio/CX-One Utility download page. (URL : https://www.fa.omron.co.jp/product/tool/26/cxone-utility/index.html)

(2) Double-click *CsCJCrossRackSupportEnable.exe* to start it.

(3) Click **Set enable** to enable CS/CJ Series Expansion Interconnection.

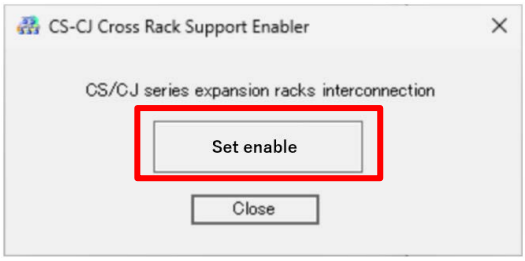

Precautions for Correct Use

This function has restrictions on the location where an Expansion Rack can be connected as well as the compatible units. For how to use the function and the restrictions, refer to the *CS/CJ-Series Expansion Interconnection Function User Guide* (Cat No. P172).

8. Migrating the Special Unit Setup

The Special Unit Setup can be migrated from the I/O Table window.

Procedure

Right-click to select the source CS1W Special Unit and select **Save Parameters** to save the settings.

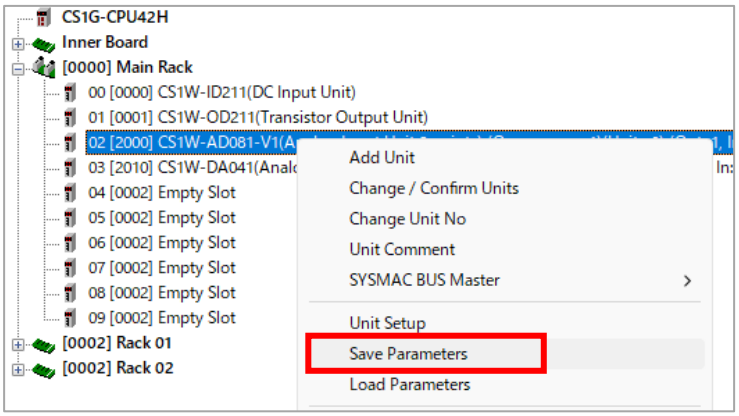

Right-click to select the destination CJ1W Special Unit and select **Load Parameters** to load the saved CS1W settings.

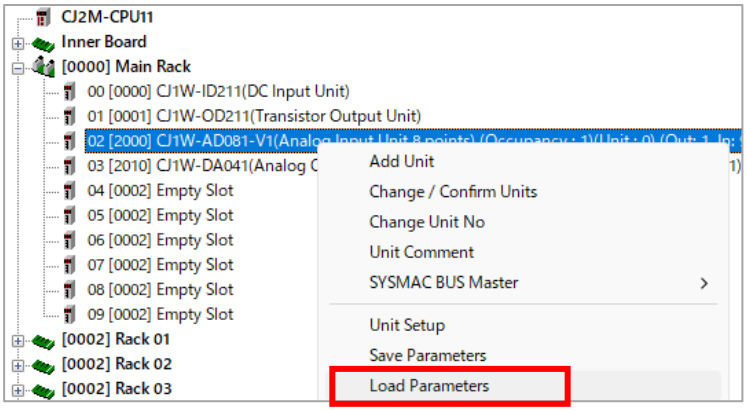

Below are the units migratable from CS1W to CJ1W.

*Migration is not possible if the Special Unit Setup differs between CS1W and CJ1W. In this case, enter the settings manually.

Special I/O Units

Unit name	Replaced CS1W Unit	Replacement CJ1W Unit
Analog Input Unit	CS1W-AD041-V1	CJ1W-AD041-V1
	CS1W-AD081-V1	CJ1W-AD081-V1
Analog Output Unit	CS1W-DA041	CJ1W-DA041
	CS1W-DA08C	CJ1W-DA08C
	CS1W-DA08V	CJ1W-DA08V
High-speed Counter Unit	CS1W-CT021	CJ1W-CT021
Position Control Unit	CS1W-NC113	CJ1W-NC113
	CS1W-NC133	CJ1W-NC133
	CS1W-NC213	CJ1W-NC213
	CS1W-NC233	CJ1W-NC233
	CS1W-NC413	CJ1W-NC413
	CS1W-NC433	CJ1W-NC433
CompoNet Master Unit	CS1W-CRM21	CJ1W-CRM21
ID Sensor Unit	CS1W-V680C11	CJ1W-V680C11
	CS1W-V680C12	CJ1W-V680C12

CPU Bus Units

Unit name	Replaced CS1W Unit	Replacement CJ1W Unit
EtherNet/IP Unit	CS1W-EIP21S CS1W-EIP21 CS1W-ETN21	CJ1W-EIP21S
	CS1W-EIP21	CJ1W-EIP21
Ethernet Unit	CS1W-ETN21	CJ1W-ETN21
DeviceNet Unit	CS1W-DRM21-V1	CJ1W-DRM21
Serial Communications Unit	CS1W-SCU21-V1 CS1W-SCU41-V1 CS1W-SCB21-V1 CS1W-SCB41-V1	CJ1W-SCU22 CJ1W-SCU32 CJ1W-SCU42
Controller Link Unit	CS1W-CLK13 CS1W-CLK23 CS1W-CLK53	CJ1W-CLK23
Special Motion Control Unit	CS1W-MCH71	CJ1W-MCH71

Precautions for Correct Use

After migrating the settings using this function, make sure that they have been successfully migrated and set.

Appendix

Appendix 1. Specification Comparison between CS1 Series and CJ3/CJ2 Series

The table below describes the differences in common specifications between the CS1 Series and the CJ3/CJ2 Series. Refer to the related manuals for details.

Items in bold are features that are deprecated from the CS1 Series.

	CS1H-H/CS1G-H CPU Units	CJ3M/CJ2H/CJ2M CPU Units	Remarks
Control method	Stored program		
I/O control method	Cyclic scan and immediate processing are both possible.		
Programming languages	Ladder Logic (LD)/Mnemonic SFC Structured Text (ST) Instruction List (IL)		
CPU processing mode	・Normal Mode ・Parallel Processing Mode with Asynchronous Memory Access ・Parallel Processing Mode with Synchronous Memory Access ・Peripheral Servicing Priority Mode	**Normal Mode only**	The CJ Series does not support Parallel Processing Mode.
Instruction length	1 to 7 steps per instruction		
Ladder instructions	Approx. 400		
Instruction execution time (LD instruction)	CS1H-H CPU Units LD: 0.02 μs, MOV: 0.18 μs CS1G-H CPU Units LD: 0.04 μs, MOV: 0.2 μs	CJ2H CPU Units LD: 0.016 μs, MOV: 0.05 μs CJ3M/CJ2M CPU Units LD: 0.04 μs, MOV: 0.12 μs	
Overhead processing time	300 μs	CJ2H-CPU6□: 100 μs CJ2H-CPU6□-EIP: 200 μs CJ3M/CJ2M-CPU3□: 270 μs CJ3M/CJ2M-CPU1□: 160 μs	
Maximum number of Expansion Racks	7 max. (C200H Expansion I/O Racks: 3 max.) Maximum number of mountable Units: 80 max.	**CJ3: 7 max.** **Maximum number of mountable Units: 40 max.** **CJ2: 3 max.** **Maximum number of mountable Units: 40 max.**	
Number of tasks	288 Cyclic tasks: 32 Interrupt tasks: 256	384 Cyclic tasks: 128 Interrupt tasks: 256	
Interrupt types	Scheduled Interrupts, I/O Interrupts, Power OFF Interrupts, and External I/O Interrupts		
Calling subroutines from more than one task	Applicable (by global subroutines)		
Languages in function block definitions	Ladder programming and structured text		
Constant cycle time	1 to 32,000 ms in 1-ms increments	0.2 to 32,000 ms in 0.1-ms increments	
Cycle time monitoring	10 to 40,000 ms in 10-ms increments	10 to 40,000 ms in 10-ms increments	
I/O refreshing	Cyclic refreshing Immediate refreshing Refreshing by IORF (097)		
I/O memory holding when changing operating modes	Applicable (depends on the ON/OFF status of the IOM Hold Bit in the Auxiliary Area)		
Battery-free I/O Memory Backup Function	Not Applicable	CJ3M CPU Unit: Applicable CJ2 CPU Unit: Not Applicable	
Load OFF	All outputs on Output Units can be turned OFF when the CPU Unit is operating in RUN mode or MONITOR mode.		
Input response time setting	Time constants can be set for inputs from Basic I/O Units.		
Startup mode setting	RUN mode, MONITOR mode, PROGRAM mode, or Use Programming Console mode	RUN mode, MONITOR mode, or PROGRAM mode	
Flash memory	The user program and parameter area data (e.g., PLC Setup) are always backed up automatically in flash memory.		
Memory Card functions			
Automatically reading programs from the Memory Card when the power is turned ON	Applicable		

	CS1H-H/CS1G-H CPU Units	CJ3M/CJ2H/CJ2M CPU Units	Remarks
Program replacement during PLC operation	Applicable		
Format in which data is stored in Memory Card	User program: Program file format PLC Setup and other parameters: Data file format I/O memory: Data file format (binary format), text format, or CSV format		
Functions for which Memory Card read/write is supported	User program instructions, Programming Devices (including Programming Consoles), host link computers, AR Area control bits, easy backup operation		
Filing	Memory Card data and the EM (Extended Data Memory) Area can be handled as files.		
Debugging	Forced set/reset Differential monitoring Data tracing (scheduled, each cycle, or when instruction is executed) Storing location generating error when a program error occurs		
Online editing	Applicable		
Program protection	Overwrite protection: Set using the DIP switch Read protection: Password set using a Programming Device		
Error check	User-defined errors (i.e., user can define fatal errors and non-fatal errors) The FPD (269) instruction can be used to check the execution time and logic of each programming block.		
Error log	Up to 20 errors are stored in the error log. Information includes the error code, error details, and the time the error occurred.		
Serial communications (CPU Unit built-in serial port)	・**Built-in peripheral port:** **Programming Device (including Programming Console) connections,** **host links, NT links** ・Built-in RS-232C port: Programming Device connections, host links, non-protocol communications, NT links, Serial Gateway	・**Built-in USB port:** **Programming Device connections** ・Built-in RS-232C port: Programming Device connections, host links, NT link (1:N), non-protocol communications, Serial Gateway	A Programming Console cannot be used with the CJ Series.
Clock	Provided.		
Power OFF detection time	AC power supply: 10 to 25 ms DC power supply: 2 to 5 ms	AC power supply: 10 to 25 ms DC power supply: 2 to 5 ms (CJ1W-PD025) 2 to 10 ms (CJ1W-PD022)	
Power OFF detection delay time	0 to 10 ms	0 to 10 ms (Cannot be used with the CJ1W-PD022)	
Memory protection	Held Areas: Holding Area data, DM Area data, EM Area data, Counter Completion Flags, and counter present values.		
Sending commands to a host link computer	FINS commands can be sent to a computer connected via the host link system by executing network communications instructions from the PLC.		
Remote programming and monitoring	Host link communications can be used for remote programming and remote monitoring through a Controller Link, Ethernet, DeviceNet^{TM}, or SYSMAC LINK network.		
Communicating across network layers	FINS message communications can be conducted across network layers. Controller Link or Ethernet: 8 layers DeviceNet or SYSMAC LINK: 3 layers		
Storing comments in CPU Unit	I/O comments can be stored as variable table files in the Memory Card, EM file memory, or comment memory.		
Program check	Program checks are performed at the start of operation for items such as no END instruction and instruction errors. CX-Programmer can also be used to check programs.		
Control output signals	RUN output: The internal contacts will turn ON (close) while the CPU Unit is operating.		
Battery	Battery Set: CS1W-BAT01	Battery Set: CJ1W-BAT01 (The battery for the CJ3M is sold separately.)	Maintenance battery model difference exists.
Self-diagnostic function	CPU error (watchdog timer), I/O verification error, I/O bus error, memory error, and battery error.		
Other functions	Storage of number of times power has been interrupted. (Stored in A514.)		

Appendix 2. Differences in Instructions

The table below describes the differences in instructions between the CS1 Series and the CJ3/CJ2 Series.
Refer to the related manuals for details.

Instruction	Difference	CS1G/H	CJ2H	CJ3M/CJ2M
TST/TSTN	Operation of P_ER	OFF	No change	No change
	Operation of P_EQ	OFF	No change	No change
	Operation of P_N	OFF	No change	No change
IL/ILC	Operation of P_ER	OFF	No change	No change
	Operation of P_EQ	OFF	No change	No change
	Operation of P_N	OFF	No change	No change
Timer/ Counter	PV refresh mode setting	BCD/BIN select one of above	BCD/BIN combined possibly	BCD/BIN combined possibly
TIM/TIMX TIMH/TIMHX TMHH/TMHHX	Operation of P_EQ	OFF	No change	No change
	Operation of P_N	OFF	No change	No change
	Timer accuracy	-0.01 to 0 seconds	When using the synchronous Unit control function, maximum 1 cycle time error	When the internal pulse control period is 1 ms, maximum 1 cycle time error
	When the cycle time is 100 ms	TIM0 to 2047: Normal operation TIM2048 to 4095: Not operating properly	When using the synchronous Unit control function, does not operate properly.	When the internal pulse control period is 1 ms, does not operate properly.
	If the instruction was specified in a task that was stopped, or jumped between JMP, CJMP, and CJPN-JME instructions and was not executed	TIM0 to 2047: Normal operation TIM2048 to 4095: Not operating properly	When using the synchronous Unit control function, does not operate properly.	When the internal pulse control period is 1 ms, does not operate properly.
CNT/CNTX	Operation of P_EQ	OFF	No change	No change
	Operation of P_N	OFF	No change	No change
=/<>/</<=/>/>=	Operation of P_ER	OFF	No change	No change
	Operation of P_N	OFF	No change	No change
CMP/CMPL CPS/CPSL	Operation of P_ER	OFF	No change	No change
	Operation of P_N	OFF	No change	No change
ZCP/ZCPL	Operation of ≥ (P_GE)	No change	Compare data ≥ Lower limit of range: ON, Others: OFF	Compare data ≥ Lower limit of range: ON, Others: OFF
	Operation of ≠ (P_NE)	No change	Compare data < Lower limit of range or Compare data > Upper limit of range: ON, Others: OFF	Compare data < Lower limit of range or Compare data > Upper limit of rang: ON, Others: OFF
	Operation of ≤ (P_LE)	No change	Compare data ≤ Upper limit of range: ON, Others: OFF	Compare data ≤ Upper limit of range: ON, Others: OFF
XCHG/XCGL	Operation of P_ER	OFF	No change	No change
	Operation of P_EQ	OFF	No change	No change
	Operation of P_N	OFF	No change	No change
MOVR/MOVRW	Operation of P_ER	OFF	No change	No change
	Operation of P_EQ	OFF	No change	No change
	Operation of P_N	OFF	No change	No change
STC/CLC	Operation of P_ER	OFF	No change	No change
	Operation of P_EQ	OFF	No change	No change
	Operation of P_N	OFF	No change	No change

Instruction	Difference	CS1G/H	CJ2H	CJ3M/CJ2M
MSKS/CLI	I/O Interrupts Operand (N)	CS1W-INT01: 0 or 1 C200HS-INT01: 0 to 3	CJ1W-INT01: 0 or 1 *Review required when using multiple C200HS.	CJ1W-INT01: 0 or 1 CJ3M/CJ2M built-in input: 100 to 107 *Review required when using multiple C200HS. *Review required when using CJ2M pulse I/O.
	I/O Interrupts Operand (C)	CS1W-INT01: #0000 to FFFF C200HS-INT01: #0000 to 00FF	CJ1W-INT01: #0000 to FFFF *Review required when using multiple C200HS.	CJ1W-INT01: #0000 to FFFF CJ3M/CJ2M built-in input: Refer to the manual. *Review required when using multiple C200HS. *Review required when using CJ2M pulse I/O.
	Scheduled Interrupts	Applicable	When using the synchronous Unit control function Not applicable	Applicable
MSKR	I/O Interrupts Operand (N)	CS1W-INT01: 0 or 1 C200HS-INT01: 0 to 3	CJ1W-INT01: 0 or 1 *Review required when using multiple C200HS.	CJ1W-INT01: 0 or 1 CJ3M/CJ2M built-in input: 100 to 107 *Review required when using multiple C200HS. *Review required when using CJ2M pulse I/O.
	I/O Interrupts Operand (C)	CS1W-INT01: #0000 to FFFF C200HS-INT01: #0000 to 00FF	CJ1W-INT01: #0000 to FFFF *Review required when using multiple C200HS.	CJ1W-INT01: #0000 to FFFF CJ3M/CJ2M built-in input: Refer to the manual. *Review required when using multiple C200HS. *Review required when using CJ2M pulse I/O.
PMCR/STUP SEND/SEND2 RECV/RECV2 CMND/CMND2	Operand	Inner boards can be specified.	Inner boards cannot be specified.	Inner boards cannot be specified.
FAL/FALS	Errors related to inner boards.	Displayed in Error Log.	Displayed as undefined errors.	Displayed as undefined errors.

Appendix 3. Differences in I/O Memory

The table below describes the differences in unit area allocation between the CS1 Series and the CJ3/CJ2 Series. Refer to the related manuals for details.

			CS1 Series	CJ3/CJ2 Series	Remarks
CIO Area	I/O Area		CIO 0 to CIO 319	CJ3: CIO 0000 to CIO 0319 CJ2: CIO 0000 to CIO 0159	
		C200H DeviceNet Area	OUT Area: CIO 50 to CIO 99 IN Area: CIO 350 to CIO 399	Not supported.	The CJ Series does not support C200H DeviceNet Area.
		PLC Link Area	CIO 247 to CIO 250 A442	Not supported.	
	CLK Data Link Area		CIO 1000 to CIO 1199		
	Synchronous Data Refresh Area		Not supported.	CIO 1200 to CIO 1295	For synchronous control between CJ2H Units
	CPU Bus Unit Area		CIO 1500 to CIO 1899 (25 words × 16 unit numbers)		
	Inner Board Area		CIO 1900 to CIO 1999	Not supported.	The CJ Series does not support Inner Board Area.
	Special I/O Unit Area		CIO 2000 to CIO 2959 (10 words × 96 unit numbers)		
	SYSMAC BUS Area		CIO 3000 to CIO 3079	Not supported.	The CJ Series does not support SYSMAC BUS Area.
	SYSMAC BUS I/O Terminal Area		CIO 3100 to CIO 3131	Not supported.	The CJ Series does not support SYSMAC BUS Area.
	Serial PLC Link Area		Not supported.	CIO 3100 to CIO 3189	For CJ3M/CJ2M serial PLC link
	CS/CJ-series DeviceNet Area		CIO 3200 to CIO 3799		
	Internal I/O Area		Among CIO 0 to CIO 6143, unused area above		
Work Area			W000 to W511		
Holding Area			H000 to H511		
Auxiliary Area		Read-only Area	A000 to A447	A000 to A447 A10000 to A11535	
		Read/Write Area	A448 to A959	A448 to A959 A960 to A1471	
TR Area			TR0 to TR15		
DM Area			D00000 to D32767		
	DM Area for Special I/O Unit		D20000 to D29599 (100 words x 96 unit numbers)		
	DM Area for CPU Bus Unit		D30000 to D31599 (100 words x 16 unit numbers)		
EM Area			E0_0 to EC_32767	(E0_0 to E18_32767)	
Timer Area			T0 to T4095		
Counter Area			C0 to C4095		
Task Flags			TK0 to TK31	TK0 to TK127	
Index Registers			IR0 to IR15		
Data Registers			DR0 to DR15		

Auxiliary Area

The table below describes the differences in Auxiliary Area between the CS1 Series and the CJ3/CJ2 Series.
However, the differences in Auxiliary Area due to the changes in the specifications below are not described.
Refer to the related manuals for details.

- Functions that are added in CJ3/CJ2
- Functions related to inner boards, peripheral ports, SYSMAC BUS, and PLC Link Units that are not supported by CJ3/CJ2
- Differences in the number of Expansion Racks and the number of mounted Units

■ Read-only Area: A000 to A447

Name	CS1 Series	CJ3/CJ2 Series	Remarks
Timer/Counter PV Refresh Mode Flag	A099 A099.15	---	The CJ Series does not support this function. Only one of BIN/BCD can be used for CS1 Series. Make the setting in the PLC Properties.
Peripheral Servicing Cycle Time	A268	---	The CJ Series does not support this function. The CJ Series does not have the Parallel Processing Mode.
Production Lot Number Information	A310 to 311 (binary digits) Example: Lot No.150701 A310 = 0701 A311 = 0015	A10000 to A10003 (BCD) Example: Lot No.150701 A10000 = 0000 A10001 = 0100 A10002 = 1507 A10003 = 0000	Differences exist. Words changing Different display method
Simple Backup Write Capacity	A397	---	The CJ Series does not support this function.
I/O Verification Error Flag (Non-fatal error)	A402 A402.09	---	The CJ Series does not support this function. Because there are no base or no open slots.
Memory Card Startup Transfer Error Flag	A403 A403.09	A401 A401.03 (Card Transfer Error Flag)	Specification changed.
Flash Memory Error Flag	A403 A403.10	A315 A315.15 (Backup Memory Error Flag)	Specification changed.
Peripheral Servicing Too Long Flag	A405 A40515	---	The CJ Series does not support this function. Only CS1 Series has the Parallel Processing Mode.
PLC Setup Error Location	A406	---	The CJ Series does not support this function. Occurs only when using a Programming Console.
Interrupt Task Error, Task Number	A426 A42600 to A42611	A426 A426.00 to A426.11 (Duplicate Refresh Error Unit Number)	Name changed.
Interrupt Task Error Cause Flag	A426 A426.15	A426 A426.15 (Duplicate Refresh Error Cause Flag)	Name changed.

■ Read/Write Area: A448 to A959

No change.

EM Area

CS1 Series	CJ3/CJ2 Series	Remarks
E0_00000 to EC_32767 32,768 words per bank 13 banks max. (0 to C hex)	E0_0 to E18_32767 32,768 words per bank 25 banks max. (0 to 18 hex)	12 banks added for the CJ2H Series. The current bank is available.
	Banks D to 18 of the EM Area (E0D_0 to E18_32767) were added to EM Area in CJ3/CJ2 CPU Units. These banks cannot be accessed by CPU Bus Units, Special I/O Units, HMIs, and Support Software that do not specifically support the CJ3/CJ2 CPU Units. Only the following CPU Bus Units and Special I/O Units specifically support the CJ3/CJ2 CPU Units. ・EtherNet/IP™ Units CJ1W-EIP21 and CJ1W-EIP21S ・Position Control Units CJ1W-NC214, CJ1W-NC234, CJ1W-NC281, CJ1W-NC414, CJ1W-NC434, CJ1W-NC481, and CJ1W-NC881 ・Analog Input Unit CJ1W-AD042 ・Analog Output Unit CJ1W-DA042V ・Serial Communications Units CJ1W-SCU22, CJ1W-SCU32, and CJ1W-SCU42	There is a restriction on Units for which additional banks can be used.

Appendix 4. Comparison of PLC Setup Settings

The table below describes the differences in PLC settings between the CS1 Series and the CJ3/CJ2 Series. Refer to the related manuals for details.

The following table gives the default settings in the PLC Setup.
To change the settings, edit the PLC Setup with the CX-Programmer and then transfer the PLC Setup to the CPU Unit.

PLC Setup tab page	Setting items		Applicable models			Default	Remarks
			CS1	CJ2H	CJ3M CJ2M		
Startup	Startup Hold Settings	Forced Status Hold Bit	Yes	Yes	Yes	Not retained when power is turned ON.	
		IOM Hold Bit	Yes	Yes	Yes	Not retained when power is turned ON.	
	Operating Mode		Yes	Yes	Yes	CS1: Programming Console CJ3/CJ2: RUN mode	
	Execution Setting	Start running program before initializing Unit/Inner board recognition	Yes	Yes	Yes	Do not start.	
CPU Unit Settings	Execute Process Settings	Do not detect Low Battery	Yes	Yes	Yes	CS/CJ2:Detect. CJ3: Not Detect (A402.04)	
		CS1: Detect Interrupt Task Error CJ3/CJ2: Detect Duplicated Refreshing Error	Yes	Yes	Yes	Detect. (A402.13)	
		Stop CPU on Instruction Error	Yes	Yes	Yes	Do not stop. (A295.08)	
		FAL Error Log Registration	Yes	Yes	Yes	Register to error log.	
	Background Execution Settings		Yes	Yes	Yes	Not executed in background.	
	Memory Allocation Settings		Yes	Refer to *Default* and *Remarks*.	Refer to *Default* and *Remarks*.	**PLC - Memory Allocation - EM Memory Settings**	The setting method is different. Refer to *Appendix 4-1* for details.
	Comms Instructions Settings in FB	Retry Counts	Yes	Yes	Yes	0 times (A58000 to A58003)	
		Response Monitoring Time	Yes	Yes	Yes	2 s (A581)	
Timing/Synchronous Settings	Watch Cycle Time		Yes	Yes	Yes	1,000 ms (1 s)	
	Constant Cycle Time (Minimum Cycle Time)		Yes	Yes	Yes	Not Constant.	
	Scheduled Interrupt Interval		Yes	Yes	Yes	10 ms	
	Power Off Detection Time		Yes	Yes	Yes	0 ms	
	Power Off Interrupt		Yes	Yes	Yes	Do not use.	
	Enable High-speed Interrupt Function		No	Yes	No	Do not enable.	
	Use Synchronous Operation		No	Yes	No	Do not use.	
Special I/O Unit Cyclic Refreshing	Disable SIOU Cycle Refresh		Yes	Yes	Yes	Not disabled.	
Unit Settings	Input response times for Basic I/O Units		Yes	Yes	Yes	8 ms	
Serial Port	Mode (Pin 5 on the DIP switch on the CPU Unit must be OFF (default) to set the mode.)		Yes	Yes	Yes	Host Link (default)	

PLC Setup tab page	Setting items	Applicable models			Default	Remarks
		CS1	CJ2H	CJ3M CJ2M		
Peripheral Port	Mode (When pin 4 on the DIP switch on the CS-series CPU Unit is ON.)	Yes	No	No	Host Link (default)	When communications functions are needed. Add a Serial Communications Unit.
Peripheral Service	Execution Mode	Yes	Refer to *Default* and *Remarks*.	Refer to *Default* and *Remarks*.	CJ3/CJ2 supports only Normal Mode.	Parallel Processing Mode cannot be set. Since the operating status will be changed, confirm that there are no problems with the system after replacement.
	Set Time to All Events	Yes	Yes	Yes	4% of cycle time for CS and 10% of cycle time for CJ3/CJ2.	
	Peripheral Servicing Priority Mode	Yes	No	No	Do not use.	CJ3/CJ2 does not support Peripheral Servicing Priority Mode. Since the operating status will be changed, confirm that there are no problems with the system after replacement.
FINS Protection	Settings for FINS write protection via network	Yes	Yes	Yes	FINS write protection disabled.	
I/O Module	Function allocations and detailed settings for Pulse I/O Modules.	No	No	Yes	---	

CPU Unit Settings

CS1 Series

The CS1 Series supports the Memory Allocation Settings.

The EM File Memory Enabled can be selected.

If the EM File Memory Enabled is selected, the specified EM bank and all subsequent banks will be used as file memory.

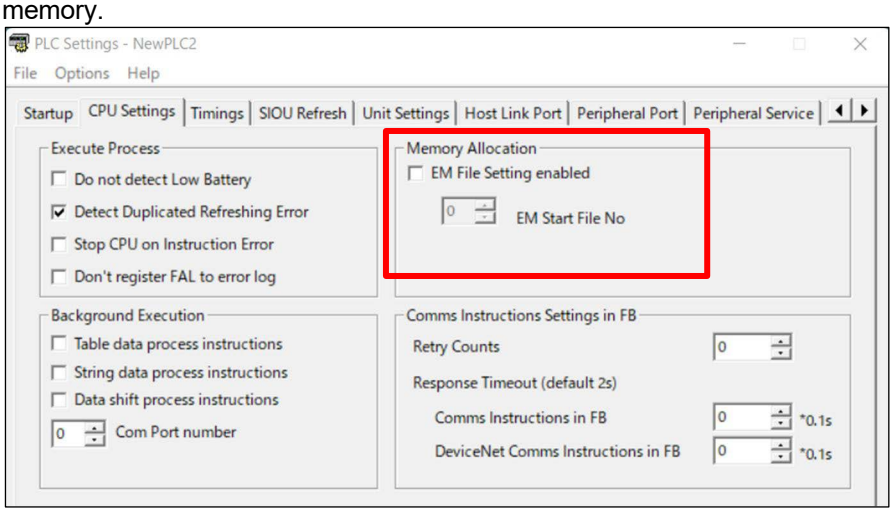

CJ3/CJ2 Series

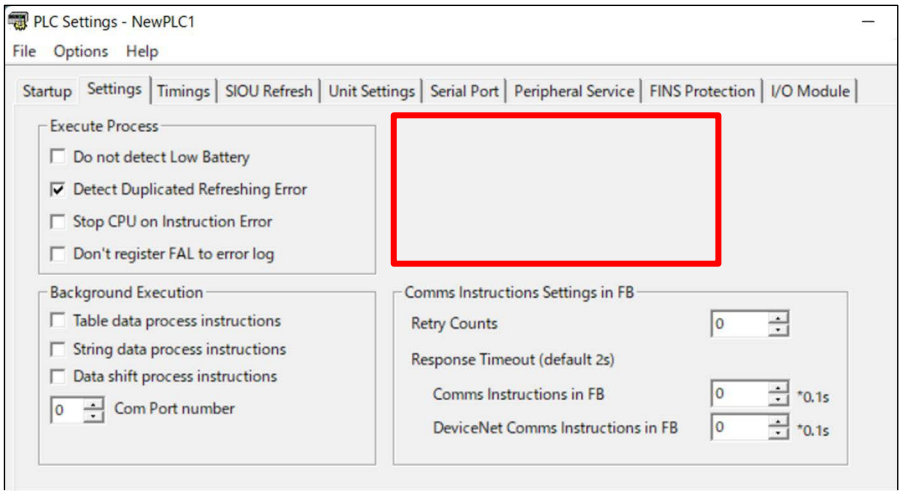

The EM file memory setting of the CJ Series has a separate setting menu from the PLC Setup.

1. Select **PLC - Memory Allocate - EM Memory Settings** from the CX-Programmer.

   The **EM Memory Settings** dialog box is displayed.

2. Select the **File memory** check box and set **EM Start File No.**

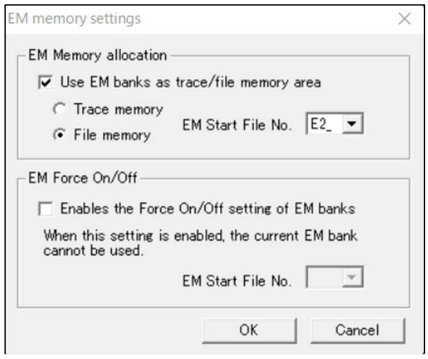

Appendix 5. Table of Input/Output Units

■ Input Units

(1) Since the terminal block and connector change, it is necessary to change the wiring. Rewire the Units or use a terminal block conversion adapter to connect them to the CJ Input Unit by referring to how to replace the series.

(2) If a different type of connector is used, change the wiring.

(3) If the input section specifications differ, make sure that the system operates correctly.

(4) If the number of circuits increases, rewire the terminals to each common terminal.

(5) If internal current consumption is different, make sure the power supply capacity is large enough.

(6) Some specifications may differ even the basic functions are compatible. Refer to the related manuals for details.

(7) Refer to the Replacement Guide From C200HX/HG/HE to CJ3/CJ2 (Cat. No. P075) for details on C200H-series Input Units.

[DC Input Units]

CS Series	Alternative CJ Series	Description	Difference	How to replace
CS1W-ID211 24 VDC, 7 mA, 16 inputs, terminal block	CJ1W-ID211 24 VDC, 7 mA, 16 inputs, terminal block	DC Input Unit with terminal block for 16 inputs.	1) Terminal block 2) Number of circuits (8 points/common, 2 circuits → 16 points/common, 1 circuit) 3) Internal current consumption (5 VDC: 100 mA → 80 mA)	1) Rewire to the terminal block. 2) Use a conversion adapter (CJ1W-3)
CS1W-ID231 24 VDC, 6 mA, 32 inputs, Fujitsu connector	CJ1W-ID231 24 VDC, 4.7 mA, 32 inputs, Fujitsu connector	DC Input Unit with connector for 32 inputs.	1) Input section specification ・Input impedance (3.9 kΩ → 5.6 kΩ) ・ON voltage (15.4 VDC → 19.0 VDC) 2) Internal current consumption (5 VDC: 150 mA → 90 mA)	Use the connector wiring as is.
	CJ1W-ID232 24 VDC, 4.7 mA, 32 inputs, MIL connector		1) Connector (Fujitsu connector → MIL connector) 2) Input section specification ・Input impedance (3.9 kΩ → 5.6 kΩ) ・ON voltage (15.4 VDC → 19.0 VDC) 3) Internal current consumption (5 VDC: 150 mA → 90 mA)	Change the connector. Rewire.
CS1W-ID261 24 VDC, 6 mA, 64 inputs, Fujitsu connector	CJ1W-ID261 24 VDC, 4.7 mA, 64 inputs, Fujitsu connector	DC Input Unit with connector for 64 inputs.	1) Input section specification ・Input impedance (3.9 kΩ → 5.6 kΩ) ・ON voltage (15.4 VDC → 19.0 VDC) 2) Internal current consumption (5 VDC: 150 mA → 90 mA)	Use the connector wiring as is.
	CJ1W-ID262 24 VDC, 4.7 mA, 64 inputs, MIL connector		1) Connector (Fujitsu connector → MIL connector) 2) Input section specification ・Input impedance (3.9 kΩ → 5.6 kΩ) ・ON voltage (15.4 VDC → 19.0 VDC) 3) Internal current consumption (5 VDC: 150 mA → 90 mA)	Change the connector. Rewire.
CS1W-ID291 24 VDC, 5 mA, 96 inputs, Fujitsu connector	CJ1W-ID261 × 1 Unit + CJ1W-ID231 × 1 Unit 24 VDC, 4.7 mA, 64 inputs, Fujitsu connector	DC Input Unit with connector for 96 inputs.	1) Number of Units: 1 Unit → 2 Units 2) Connector (Fujitsu connector 56 pins × 2 → 40 pins × 3) 3) Number of circuits (16 points/common, 6 circuits → 16 points/common, 4 circuits + 16 points/common, 2 circuits) 4) Input section specification ・Input impedance (4.7 kΩ → 5.6 kΩ) ・ON voltage (17 VDC → 19.0 VDC) 5) Internal current consumption (5 VDC: 200 mA → 90 mA × 2)	Change the connector. Rewire.
	CJ1W-ID262 × 1 Unit + CJ1W-ID232 × 1 Unit 24 VDC, 4.7 mA, 64 inputs, MIL connector		1) Number of Units: 1 Unit → 2 Units 2) Connector (Fujitsu connector 56 pins × 2 → MIL connector 40 pins × 3) 3) Number of circuits (16 points/common, 6 circuits → 16 points/common, 4 circuits + 16 points/common, 2 circuits) 4) Input section specification ・Input impedance (4.7 kΩ → 5.6 kΩ) ・ON voltage (17 VDC → 19.0 VDC) 5) Internal current consumption (5 VDC: 200 mA → 90 mA × 2)	Change the connector. Rewire.

[AC Input Units]

CS Series	Alternative CJ Series	Description	Difference	How to replace
CS1W-IA111 100 to 120 VAC/VDC, 16 inputs, terminal block	CJ1W-IA111 100 to 120 VAC, 16 inputs, terminal block	100 VAC Input Unit with terminal block for 16 inputs.	1) Terminal block 2) DC input voltage (100 to 120 VDC → DC input not possible) 3) Number of circuits (8 points/common, 2 circuits → 16 points/common, 1 circuit) 4) Input section specification ・Input impedance (10 kΩ/50 Hz → 14.5 kΩ/50 Hz) ・ON voltage (65 V → 70 V) ・OFF voltage (20 V → 20 V) 4) Internal current consumption (5 VDC, 110 mA → 90 mA)	1) Rewire to the terminal block. 2) Use a conversion adapter (CJ1W-AT611).
CS1W-IA211 200 to 240 VAC, 16 inputs, terminal block	CJ1W-IA201 × 2 Units 200 to 240 VAC, 8 inputs × 2, terminal block	200 VAC Input Unit with terminal block for 16 inputs.	1) Number of Units: 1 Unit → 2 Units 2) Terminal block 3) Input points (16 points → 8 points × 2 Units) 4) Internal current consumption (5 VDC, 110 mA → 80 mA × 2 Units)	Rewire to the terminal block.

[Interrupt Input Units]

CS Series	Alternative CJ Series	Description	Difference	How to replace
CS1W-INT01 16 inputs, 24 VDC, 7 mA, ON response time: 0.1 ms, OFF response time: 0.5 m, terminal block	CJ1W-INT01 16 inputs, 24 VDC, 7 mA, ON response time: 0.05 ms, OFF response time: 0.5 m, terminal block	Interrupt Input Unit with terminal block for 16 inputs.	1) Terminal block 2) Number of circuits Input circuit (8 points/common, 2 circuits → 16 points/common, 1 circuit) 3) Input section specification ON response time (0.1 ms → 0.05 ms)	1) Rewire to the terminal block. 2) Use a conversion adapter (CJ1W-AT611).

[Quick-response Input Units]

CS Series	Alternative CJ Series	Description	Difference	How to replace
CS1W-IDP01 16 inputs, 24 VDC, 7 mA, ON response time: 0.1 ms, OFF response time: 0.5 m, terminal block	CJ1W-IDP01 16 inputs, 24 VDC, 7 mA, ON response time: 0.05 ms, OFF response time: 0.5 m, terminal block	Quick-response Input Unit with terminal block for 16 inputs.	1) Terminal block 2) Number of circuits Input circuit (8 points/common, 2 circuits → 16 points/common, 1 circuit) 3) Input section specification ON response time (0.1 ms → 0.05 ms)	1) Rewire to the terminal block. 2) Use a conversion adapter (CJ1W-AT611).

■ Output Units

(1) Since the terminal block and connector change, it is necessary to change the wiring for some models. Rewire the Units or use a terminal block conversion adapter to connect them to the CJ Input Unit by referring to how to replace the series.

(2) If a different type of connector is used, change the wiring.

(3) If the number of circuits increases, rewire the terminals to each common terminal.

(4) If the output section specifications differ, make sure that the system operates correctly.

(5) The relay lifetime may vary depending on usage when a different relay is used. Refer to A-1-3 Precautions on Contact Output Unit in the CJ-series CJ2 CPU Unit Hardware User's Manual (Cat. No. W472) or CJ3 CPU Unit Hardware User's Manual (Cat. No. W664) for details.

(6) If internal current consumption is different, make sure the power supply capacity is large enough.

(7) If the voltage and current consumption of the external power supply differ, make sure the power supply capacity is large enough.

(8) Some specifications may differ even the basic functions are compatible. Refer to the related manuals for details.

(9) Refer to the Replacement Guide From C200HX/HG/HE to CJ3/CJ2 (Cat. No. P075) for details on C200H-series Output Units.

[Relay Output Units]

CS Series	Alternative CJ Series	Description	Difference	How to replace
CS1W-OC201 8 outputs (independent contacts), 250 VAC/24 VDC: 2 A, 120 VDC/0.1 A, terminal block	CJ1W-OC201 8 outputs (independent contacts), 250 VAC/24 VDC: 2 A, terminal block	Relay Output Unit with terminal block for 8 outputs.	1) Terminal block 2) 120 VDC input (Possible → Not possible) 3) Output section specification 4) Internal current consumption (5 VDC: 100 mA → 90 mA)	1) Rewire to the terminal block. 2) Use a conversion adapter (CJ1W-AT601).
CS1W-OC211 16 outputs, 250 VAC/24 VDC: 2 A, 120 VDC/0.1 A	CJ1W-OC211 16 outputs, 250 VAC/24 VDC: 2 A,	Relay Output Unit with terminal block for 16 outputs.	1) Terminal block 2) 120 VDC input (Possible → Not possible) 3) Number of circuits (8 points/common, 2 circuits → 16 points/common, 1 circuit) 4) Internal current consumption (5 VDC: 130 mA → 110 mA)	1) Rewire to the terminal block. 2) Use a conversion adapter (CJ1W-AT611).

[Transistor Output Units]

CS Series	Alternative CJ Series	Description	Difference	How to replace
CS1W-OD211 12 to 24 VDC, 0.5 A, terminal block, 16 sinking outputs	CJ1W-OD211 12 to 24 VDC, 0.5 A, terminal block, 16 sinking outputs, HAT	Transistor Output Unit with terminal block for 16 sinking outputs.	1) Terminal block 2) Number of circuits (8 points/common, 2 circuits →16 points/common, 1 circuit) 3) Output section specification ・Output capacity (0.5 A/point, 8 A/Unit → 0.5 A/point, 5 A/Unit) ・ON response time (0.5 ms → 0.1 ms) ・OFF response time (1 ms → 0.8 ms) 4) Internal current consumption (5 VDC: 170 mA → 100 mA)	1) Rewire to the terminal block. 2) Use a conversion adapter (CJ1W-AT612).
CS1W-OD212 24 VDC, 0.5 A, terminal block, load short circuit protection (with alarm output), 16 sourcing outputs	CJ1W-OD212 12 to 24 VDC, 0.5 A, terminal block, load short circuit protection, 16 sourcing outputs	Transistor Output Unit with terminal block for 16 sourcing outputs.	1) Terminal block 2) Output section specification ・ON response time (0.5 ms → 0.1 ms) ・OFF response time (1 ms → 0.8 ms) 3) Internal current consumption (5 VDC: 170 mA → 100 mA)	1) Rewire to the terminal block. 2) Use a conversion adapter (CJ1W-AT612).
CS1W-OD231 12 to 24 VDC, 0.5 A, 32 sinking outputs, Fujitsu connector	CJ1W-OD231 12 to 24 VDC, 0.5 A, 32 sinking outputs, Fujitsu connector, SH8K	Transistor Output Unit with connector for 32 sinking outputs.	1) Output section specification ・Output capacity (0.5 A/point, 5 A/Unit → 0.5 A/point, 4 A/Unit) ・ON response time (0.5 ms → 0.1 ms) ・OFF response time (1 ms → 0.8 ms) 2) Internal current consumption (5 VDC: 270 mA → 140 mA)	Use the connector wiring as is.
	CJ1W-OD233		1) Connector (Fujitsu connector → MIL connector) 2) Output section specification	Change the connector. Rewire.

CS Series	Alternative CJ Series	Description	Difference	How to replace
	12 to 24 VDC, 0.5 A, 32 sinking outputs, MIL connector		・Output capacity (0.5 A/point, 5 A/Unit → 0.5 A/point, 4 A/Unit) ・ON response time (0.5 ms → 0.1 ms) ・OFF response time (1 ms → 0.8 ms) 3) Internal current consumption (5 VDC: 270 mA → 140 mA)	
CS1W-OD232 24 VDC, 0.5 A, load short circuit protection, 32 sourcing outputs, Fujitsu connector	CJ1W-OD232 24 VDC, 0.5 A, load short circuit protection, 32 sourcing outputs, MIL connector	Transistor Output Unit with connector for 32 sourcing outputs.	1) Connector (Fujitsu connector → MIL connector) 2) Output section specification ・Output capacity (0.5 A/point, 5 A/Unit → 0.5 A/point, 4 A/Unit) ・ON response time (0.5 ms → 0.1 ms) ・OFF response time (1 ms → 0.8 ms) 3) Internal current consumption (5 VDC: 270 mA → 140 mA)	Change the connector. Rewire.

[Transistor Output Units]

CS Series	Alternative CJ Series	Description	Difference	How to replace
CS1W-OD261 12 to 24 VDC, 0.3 A, 64 sinking outputs, Fujitsu connector	CJ1W-OD261 12 to 24 VDC, 0.3 A, 64 sinking outputs, Fujitsu connector	Transistor Output Unit with connector for 64 sinking outputs.	1) Output section specification ・Residual voltage (1.5 V → 1.5 V) ・ON response time (0.5 ms → 0.1 ms) ・OFF response time (1 ms → 0.8 ms) 2) Internal current consumption (5 VDC: 390 mA → 170 mA)	Use the connector wiring as is.
	CJ1W-OD263 12 to 24 VDC, 0.3 A, 64 sinking outputs, MIL connector		1) Connector (Fujitsu connector → MIL connector) 2) Output section specification ・ON response time (0.5 ms → 0.1 ms) ・OFF response time (1 ms → 0.8 ms) 3) Internal current consumption (5 VDC: 390 mA → 170 mA)	Change the connector. Rewire.
CS1W-OD262 24 VDC, 0.3 A, 64 sourcing outputs, Fujitsu connector	CJ1W-OD262 24 VDC, 0.3 A, 64 sourcing outputs, MIL connector	Transistor Output Unit with connector for 64 sourcing outputs.	1) Connector (Fujitsu connector → MIL connector) 2) Output section specification ・ON response time (0.5 ms → 0.1 ms) ・OFF response time (1 ms → 0.8 ms) 3) Internal current consumption (5 VDC: 390 mA → 170 mA)	Change the connector. Rewire.
CS1W-OD291 12 to 24 VDC, 0.3 A, 96 sinking outputs, Fujitsu connector	CJ1W-OD261 + CJ1W-OD231 12 to 24 VDC, 0.3 A, 64 sinking outputs + 32 sinking outputs, Fujitsu connector	Transistor Output Unit with connector for 96 sinking outputs.	1) Number of Units: 1 Unit → 2 Units 2) Connector (Fujitsu connector 56 pins x 2 → 40 pins × 3) 3) Number of circuits (16 points/common, 6 circuits → 16 points/common, 4 circuits + 2 circuits) 4) Output section specification ・Output capacity (0.1 A/point, 7.2 A/Unit → 0.3 A/point, 6.4 A/Unit) ・ON response time (0.5 ms → 0.1 ms) ・OFF response time (1 ms → 0.8 ms) 5) Internal current consumption (5 VDC: 480 mA → 170 mA)	Change the connector. Rewire.
	CJ1W-OD263 + CJ1W-OD233 12 to 24 VDC, 0.3 A, 64 sinking outputs + 32 sinking outputs, MIL connector		1) Number of Units: 1 Unit → 2 Units 2) Connector (Fujitsu connector → MIL connector) 3) Number of circuits (16 points/common, 6 circuits → 16 points/common, 4 circuits + 2 circuits) 4) Output section specification ・Output capacity (0.1 A/point, 7.2 A/Unit → 0.3 A/point, 6.4 A/Unit) ・ON response time (0.5 ms → 0.1 ms) ・OFF response time (1 ms → 0.8 ms) 5) Internal current consumption (5 VDC: 480 mA → 170 mA)	Change the connector. Rewire.
CS1W-OD292 12 to 24 VDC, 0.1 A, 96 sourcing outputs, Fujitsu connector	CJ1W-OD232 24 VDC, 0.5 A, 32 sourcing outputs, with fuse, MIL connector	Transistor Output Unit with connector for 96 sourcing outputs.	1) Number of Units: 1 Unit → 3 Units 2) Connector (Fujitsu connector → MIL connector) 3) Number of circuits ・Output circuit (16 points/common, 3 circuits × 2CN → 16 points/common, 2 circuits × 3) 4) Output section specification ・Output capacity (0.1 A/point, 7.2 A/Unit → 0.5 A/point, 4 A/Unit × 3) 5) Internal current consumption (10.2 to 26.4 VDC: 100 mA → 70 mA x 3)	Change the connector. Rewire.

[Triac Output Units]

CS Series	Alternative CJ Series	Description	Difference	How to replace
CS1W-OA201 250 VAC, 1.2 A, terminal block, 8 outputs,	CJ1W-OA201 250 VAC, 0.6 A, terminal block, 8 outputs,	Triac Output Unit with terminal block for 8 outputs.	1) Terminal block 2) Input section specification ・Maximum current (1.2 A, 4.8 A/Unit → 0.6 A, 2.4 A/Unit) ・Maximum inrush current (10 A: 100 ms, 20 A: 10 ms → 10 A: 15 ms) ・Minimum switching capacity (10 VAC: 100 mA, 24 VAC: 50 mA, 100 VAC: 10 mA → 75 VAC: 50 mA) 3) Internal current consumption (5 VDC: 230 mA → 220 mA) 4) Fuse detection (Supported → Not supported)	1) Rewire to the terminal block. 2) Use a conversion adapter (CJ1W-AT602).
CS1W-OA211 250 VAC, 0.5 A, 16 outputs, terminal block	CJ1W-OA201 × 2 Units 250 VAC, 0.6 A, terminal block, 8 analog outputs × 2,	Triac Output Unit with terminal block for 16 outputs.	1) Number of Units (1 Unit → 2 Units) 2) Terminal block 3) Number of circuits (8 points/common, 1 circuit → 8 points/common, 1 circuit × 2 Units) 4) Input section specification ・Maximum current (0.5 A, 4 A/Unit → 0.6 A, 2.4 A/Unit) ・Maximum inrush current (15 A: 10 ms → 10 A: 15 ms) 5) Internal current consumption (5 VDC: 406 mA → 220 mA × 2 Units)	Rewire to the terminal block.

■ Input/Output Units

(1) The CJ Series has following I/O Units: CJ1W-MD23□, CJ1W-MD26□, and CJ1W-MD563.

(2) Some specifications may differ even the basic functions are compatible. Refer to the related manuals for details.

(3) Refer to the Replacement Guide From C200HX/HG/HE to CJ3/CJ2 (Cat. No. P075) for details on C200H-series Input/Output Units.

[DC Input/Transistor Output Units]

CS Series	Alternative CJ Series	Description	Difference	How to replace
CS1W-MD261 24 VDC/32 inputs (6 mA), 12 to 24 VDC/32 outputs (0.3 A, sinking), Fujitsu connector	CJ1W-MD261 24 VDC/32 inputs (4.6 mA), 12 to 24 VDC/32 outputs (0.3 A, sinking), Fujitsu connector	DC Input/Transistor Output Unit with connector for 32 inputs and 32 outputs.	1) Input section specification ・Input impedance (3.9 kΩ → 5.6 kΩ) ・ON voltage (15.4 V → 19 V) 2) Internal current consumption (5 VDC: 270 mA → 140 mA)	Use the connector wiring as is.
	CJ1W-MD263 24 VDC/32 inputs (4.6 mA), 12 to 24 VDC/32 outputs (0.3 A, sinking), MIL connector		1) Connector (Fujitsu connector → MIL connector) 2) Input section specification ・Input impedance (3.9 kΩ → 5.6 kΩ) ・ON voltage (15.4 V → 19 V) 3) Internal current consumption (5 VDC: 270 mA → 140 mA)	Change the connector. Rewire.
CS1W-MD262 24 VDC/32 inputs (6 mA), 12 to 24 VDC/32 outputs (0.3 A, sourcing), Fujitsu connector	CJ1W-MD232 × 2 Units 24 VDC/16 inputs x 2 (7 mA), 12 to 24 VDC/16 outputs x 2 (0.3 A, sourcing), MIL connector	DC Input/Transistor Output Unit with connector for 32 inputs and 32 outputs.	1) Number of Units (1 Unit → 2 Units) 2) Connector (Fujitsu connector → MIL connector) 3) Number of circuits ・Output circuit (16 points/common, 2 circuits → 16 points/common, 1 circuit × 2) ・Input circuit (16 points/common, 2 circuits → 16 points/common, 1 circuit × 2) 4) Output section specification ・Output capacity (0.3 A/point, 3.2 A/Unit → 0.5 A/point, 2A/Unit) 5) Input section specification ・Input impedance (3.9 kΩ → 3.3 kΩ) ・ON voltage (15.4 V → 14.4 V) 6) Internal current consumption (5 VDC: 270 mA → 130mA x 2)	Change the connector. Rewire.
CS1W-MD291 24 VDC/48 inputs (5 mA), 12 to 24 VDC/48 outputs (0.1 A, sinking), Fujitsu connector, with fuse	CJ1W-MD261 + CJ1W-MD231 24 VDC/32 inputs (6 mA) + 24 VDC/16 inputs (7 mA), 12 to 24 VDC/32 outputs + 16 outputs (0.5 A, sinking), Fujitsu connector	DC Input/Transistor Output Unit with connector for 48 inputs and 48 outputs.	1) Number of Units (1 Unit → 2 Units) 2) Connector (Fujitsu connector 56 pins × 2 → 40 pins × 3) 3) Number of circuits ・Output circuit (16 points/common, 3 circuits) → 16 points/common, 2 circuits + 1 circuit) ・Input circuit (16 points/common, 3 circuits → 16 points/common, 2 circuits + 1 circuit) 4) Output section specification ・Output capacity (0.1 A/point, 3.6 A/Unit → 0.3 A/point, 3.2 A/Unit + 0.5 A/point, 2 A/Unit) 5) Input section specification ・Input impedance (4.7 kΩ → 5.6 kΩ, 3.3 kΩ) ・ON voltage (17 V → 19V, 14.4 V) 6) Internal current consumption (5 VDC: 350 mA → 140 mA, 130 mA)	Change the connector. Rewire.
	CJ1W-MD263 + CJ1W-MD233		1) Number of Units (1 Unit → 2 Units) 2) Connector (Fujitsu connector → MIL	Change the connector.

CS Series	Alternative CJ Series	Description	Difference	How to replace
	24 VDC/32 inputs (6 mA) + 24 VDC/16 inputs (7 mA), 12 to 24 VDC/32 outputs (0.5 A) + 12 to 24 VDC/16 outputs (0.5 A, sinking), MIL connector		connector) 3) Number of circuits ・Output circuit (16 points/common, 3 circuits) → 16 points/common, 2 circuits + 1 circuit) ・Input circuit (16 points/common, 3 circuits → 16 points/common, 2 circuits + 1 circuit) 4) Output section specification ・Output capacity (0.1 A/point, 3.6 A/Unit → 0.3 A/point, 3.2 A/Unit + 0.5 A/point, 2 A/Unit) 5) Input section specification ・Input impedance (4.7 kΩ → 5.6 kΩ, 3.3 kΩ) ・ON voltage (17 V → 19V, 14.4 V) 6) Internal current consumption (5 VDC: 350 mA → 140 mA, 130 mA)	Rewire.
CS1W-MD292	CJ1W-MD232 x 3 Units	DC Input/Transistor Output Unit with connector for 48 inputs and 48 outputs.	1) Number of Units (1 Unit → 3 Units) 2) Connector (Fujitsu connector → MIL connector) 3) Number of circuits ・Output circuit (16 points/common, 3 circuits) → 16 points/common, 2 circuits x 3) ・Input circuit (16 points/common, 3 circuits → 16 points/common, 2 circuits x 3) 4) Output section specification ・Output capacity (0.1 A/point, 3.6 A/Unit → 0.5 A/point, 2 A/Unit x 3) 5) Input section specification ・Input impedance (4.7 kΩ → 3.3 kΩ) ・ON voltage (17 V → 14.4 V) 6) Internal current consumption (5 VDC: 350 mA → 130 mA)	Change the connector. Rewire.
24 VDC/48 inputs (5 mA), 12 to 24 VDC/48 outputs (0.1 A, sourcing), Fujitsu connector	24 VDC/16 inputs x 3 (7 mA), 12 to 24 VDC/16 outputs x 3 (0.3 A, sourcing), MIL connector			

[TTL I/O Units]

CS Series	Alternative CJ Series	Description	Difference	How to replace
CS1W-MD561	CJ1W-MD563	MIL connector for 32 inputs and 32 outputs.	1) Connector (Fujitsu connector → MIL connector) 2) Internal current consumption (5 VDC: 270 mA → 190 mA)	Change the connector. Rewire.
32 inputs 5 VDC, 3.5 mA 32 outputs, 5 VDC, 35 mA Fujitsu connector	32 inputs 5 VDC, 3.5 mA 32 outputs, 5 VDC, 35 mA sinking MIL connector			

[B7A Interface Units]

CS Series	Alternative CJ Series	Remarks
CS1W-B7A12 32 inputs	CJ1W-B7A14 64 inputs	CJ-series B7A Interface Units are discontinued. Different in the number of I/O points and the terminal block. The transmission delay time of 19.2 ms typical for standard and 3 ms typical for high-speed remains the same.
CS1W-B7A02 32 outputs	CJ1W-B7A04 64 outputs	
CS1W-B7A21 16 inputs, 16 outputs	CJ1W-B7A22 32 inputs, 32 outputs	
CS1W-B7A22 32 inputs, 32 outputs		

■ Special I/O Units and CPU Bus Units

(1) Since the terminal block is different, it is necessary to change the wiring. Some Analog I/O Units can be used with a terminal block conversion adapter. Rewire the Units or use a terminal block conversion adapter to connect them to the CJ Input Unit by referring to how to replace the series.

(2) If a different type of connector is used, change the wiring.

(3) If the output section specifications differ, make sure that the system operates correctly.

(4) If internal current consumption is different, make sure the power supply capacity is large enough.

(5) Some specifications may differ even the basic functions are compatible. Refer to the related manuals for details.

(6) Refer to the Replacement Guide From C200HX/HG/HE to CJ3/CJ2 (Cat. No. P075) for details on C200H-series Special I/O Units.

[Communications Units]

CS Series	CJ Series	Remarks
[Serial Communications Unit] CS1W-SCU21-V1 CS1W-SCU31-V1 [Serial Communications Board] CS1W-SCB21-V1 CS1W-SCB41-V1	[Serial Communications Unit] CJ1W-SCU22 CJ1W-SCU32 CJ1W-SCU42 The following models are discontinued. CJ1W-SCU21-V1 CJ1W-SCU31-V1 CJ1W-SCU41-V1	Inner boards cannot be connected to the CJ-series CPU Units. Use Serial Communications Units instead. The same RS-232C cable can be used. For RS-422A/485, rewiring from the connector to the terminal block is necessary. Refer to *Appendix 6. Comparison of Special I/O Units* or *CS/CJ-series Serial Communications Units Operation Manual* (Cat. No. W336) for details.
[Ethernet] CS1W-ETN21 [EtherNet/IP] CS1W-EIP21 CS1W-EIP21S	[EtherNet/IP] CJ1W-EIP21S The following models are discontinued. [Ethernet] CJ1W-ETN21 [EtherNet/IP] CJ1W-EIP21	The same Ethernet cable can be used. Refer to the *CS/CJ-series EtherNet/IP Units Operation Manual* (Cat. No. W465) for details. Refer to the *CS/CJ-series Replacement Guide From EtherNet/IP and Ethernet Units to Enhanced Security Units* (Cat. No. P152) for replacement of CS1W-EIP21/ETN21 with EIP21S.
[Controller Link Unit] Wired: CS1W-CLK23 Optical ring: CS1W-CLK13 Optical ring: CS1W-CLK53	[Controller Link Unit] Wired: CJ1W-CLK23 Optical ring: No replacement model	Since the CJ Series does not support the optical ring method, use the wired method instead. The same cable for the wired type can be used. Refer to the *Controller Link Units Operation Manual* (Cat. No. W309) for details.
[SYSMAC LINK Unit] Coaxial: CS1W-SLK21 Optical: CS1W-SLK11	[SYSMAC LINK Unit] Coaxial: CJ1W-SLK21 Optical: CJ1W-SLK11	The same SYSMAC LINK cable can be used. Refer to the *CS-series SYSMAC LINK Units Operation Manual* (Cat. No. W367) and *CJ-series SYSMAC LINK Units Operation Manual* (Cat. No. W663) for details.
[FL-net] CS1W-FLN22	[FL-net] CJ1W-FLN22	The same Ethernet cable can be used. Refer to the *CS/CJ-series FL-net Units Operation Manual* (Cat. No. W440) for details.
[DeviceNet™] CS1W-DRM21(-V1)	[DeviceNet™] CJ1W-DRM21	The same DeviceNet cable can be used. Refer to the *CS/CJ-series DeviceNet Units Operation Manual* (Cat. No. W380) for details.
[CompoNet™] CS1W-CRM21	[CompoNet™] CJ1W-CRM21	The same CompoNet cable can be used. Refer to the *CS/CJ-series CompoNet Master Units Operation Manual* (Cat. No. W456) for details.

[Process I/O Units]

CS Series	CJ Series	Remarks
[Isolated Thermocouple Input Unit]	[Isolated Thermocouple Input Unit]	When you replace with CJ1W-PTS, check the input points, corresponding thermocouple, and signal range. Refer to *Appendix 6. Comparison of Special I/O Units* or *CS/CJ-series Analog I/O Units Operation Manual* (Cat. No. W368) for details.
CS1W-PTS11	CJ1W-PH41U	
CS1W-PTS51	CJ1W-PTS51	
CS1W-PTS55	CJ1W-PTS51 × 2	
CS1W-PTS01-V1	CJ1W-PTS15	
[Isolated Resistance Thermometer Input Unit]	[Isolated Resistance Thermometer Input Unit]	When you replace with CJ1W-PTS, check the input points, corresponding thermocouple, and signal range. Refer to *Appendix 6. Comparison of Special I/O Units* or *CS/CJ-series Analog I/O Units Operation Manual* (Cat. No. W368) for details.
CS1W-PTS12	CJ1W-PH41U	
CS1W-PTS52	CJ1W-PTS52	
CS1W-PTS56	CJ1W-PTS52 × 2	
CS1W-PTS02	CJ1W-PH41U	
CS1W-PTS03	No replacement model	The CJ series does not support the Ni508.4 temperature sensor.

		Please change the temperature sensor or replace it using a converter that converts Ni508.4 to a different signal.

CS Series	CJ Series	Remarks
[Isolated DC Input Unit]		Different in some specifications and area allocations. Refer to *Appendix 6. Comparison of Special I/O Units* or *CS/CJ-series Analog I/O Units Operation Manual* (Cat. No. W368) for details.
CS1W-PDC01	CJ1W-PH41U	
CS1W-PDC11	CJ1W-PH41U	
CS1W-PDC55	CJ1W-AD04U × 2	
[Isolated 2-wire Transmission Device Input Unit] CS1W-PTW01	[Isolated-type Universal Input Unit] CJ1W-PH41U	Different in some specifications and area allocations. A 2-wire Transmission Device Input Unit requires an external 24 V power supply. Refer to *Appendix 6. Comparison of Special I/O Units* or *CS/CJ-series Analog I/O Units Operation Manual* (Cat. No. W368) for details.
[Power Transducer Input Unit] CS1W-PTR01	[Isolated-type Universal Input Unit] CJ1W-AD04U × 2	The CJ Series does not provide a Power Transducer Input Unit. Change the power transducer output range from 0 to 1 mA/±1 mA to, for example, 4 to 20 mA/0 to 5 V/±10 V before inputting it to CJ1W-AD04U. Two CJ1W-AD04U Units are necessary since CS1W-PTR01 has 8 inputs. Refer to the *CS/CJ-series Analog I/O Units Operation Manual* (Cat. No. W368) for details.
[DC Input Unit (100 mV)] CS1W-PTR02	[Isolated-type Universal Input Unit] CJ1W-PH41U × 2	Use CJ1W-PH41U in the ±100 mV range for replacement. Two CJ1W-PH41U Units are necessary since CS1W-PTR02 has 8 inputs. Different in some functions, capabilities, and area allocations. Refer to the *CS/CJ-series Analog I/O Units Operation Manual* (Cat. No. W368) for details.
[Isolated Control Output Unit]		The CJ Series does not provide a channel-isolated control output unit. Replace it with a non-channel-isolated control output unit. Different in some functions, capabilities, and area allocations. Refer to *Appendix 6. Comparison of Special I/O Units* or *CS/CJ-series Analog I/O Units Operation Manual* (Cat. No. W345) for details.
CS1W-PMV01	[Isolated Control Output Unit] No replacement model	
	[Analog Output Unit] CJ1W-DA041	
CS1W-PMV02	[Isolated Control Output Unit] No replacement model	
	[Analog Output Unit] CJ1W-DA041	

[Analog I/O Units]

CS Series	CJ Series	Remarks	How to replace
[Analog Input Unit]		Equivalent in functions and capabilities. Check their input specifications including resolutions, conversion periods, and I/O points before replacement. Refer to *Appendix 6. Comparison of Special I/O Units* or *CS/CJ-series Analog I/O Units Operation Manual* (Cat. No. W345) for details.	1) Rewire. 2) Use a conversion adapter (CJ1W-AT681).
CS1W-AD041-V1	CJ1W-AD041-V1		
CS1W-AD081-V1	CJ1W-AD081-V1		
CS1W-AD161	CJ1W-AD081-V1 × 2		Rewire to the terminal block instead of to the connector.
[Analog Output Unit]		Equivalent in functions and capabilities. Refer to *Appendix 6. Comparison of Special I/O Units* or *CS/CJ-series Analog I/O Units Operation Manual* (Cat. No. W345) for details.	1) Rewire. 2) Use a conversion adapter (CJ1W-AT641).
CS1W-DA041	CJ1W-DA041		
CS1W-DA08V	CJ1W-DA08V		1) Rewire. 2) Use a conversion adapter (CJ1W-AT682).
CS1W-DA08C	CJ1W-DA08C		
[Analog I/O Unit]		Equivalent in functions and capabilities. CJ1W-MAD42 has 2 output points while CS has 4 output points. Refer to *Appendix 6. Comparison of Special I/O Units* or *CS/CJ-series Analog I/O Units Operation Manual* (Cat. No. W345) for details.	Rewire to the terminal block.
CS1W-MAD44	CJ1W-MAD42		
	CJ1W-AD041-V1 + CJ1W-DA041		

[Special I/O Units]

CS Series	CJ Series	Remarks
[MECHATROLINK-II] CS1W-NC271 CS1W-NC471 CS1W-NC471	[MECHATROLINK-II] CJ1W-NC271 CJ1W-NC471 CJ1W-NC471	The same MECHATROLINK-II cable can be used. Refer to the *CS/CJ-series Position Control Units Operation Manual* (Cat. No. W426) for details.
[Isolated Pulse Input Unit] CS1W-PPS01	[Isolated Pulse Input Unit] No replacement model	The CJ Series does not provide an Isolated Pulse Input Unit.
[Loop Control Board] CS1W-LCB01 CS1W-LCB05	[Loop Control Board] No replacement model	The CJ Series does not provide a Loop Control Board.

CS Series	CJ Series	Remarks
[High-speed Counter Unit] CS1W-CT021 CS1W-CT041	[High-speed Counter Unit] CJ1W-CT021	Refer to *Appendix 6. Comparison of Special I/O Units* or *CJ-series High-speed Counter Units Operation Manual* for details. The following conversion cables can be used for replacement with CJ1W-CT021. CS1W-CT021 → CJ1W-CT021: CJ1W-CM211-CT conversion cable CS1W-CT041 → CJ1W-CT021 x 2: CJ1W-CM212-CT conversion cable For details on the conversion cables, refer to the *CS I/O Terminal Block Conversion Adapters・Conversion Cables Datasheet* (Cat. No. P169).
	[CPU Unit + Pulse I/O Module] CJ3M/CJ2M-CPU1□ + CJ2M-MD21□	CJ3M/CJ2M-CPU1□ and CJ2M-MD21□ are required. CJ3M/CJ2M *CPU Unit Pulse I/O Module User's Manual* (Cat. No. W486)
[Customizable Counter Unit] CS1W-HCP22-V1 CS1W-HCA12-V1 CS1W-HCA22-V1 CS1W-HIO01-V1	[Customizable Counter Unit] No replacement model	The CJ Series does not provide a Customizable Counter Unit. Use a combination of I/O Unit, Analog I/O Unit and Pulse Input Unit for CJ Series instead.
[Position Control Unit] CS1W-NC113 CS1W-NC213 CS1W-NC413 CS1W-NC133 CS1W-NC233 CS1W-NC433	[Position Control Unit] CJ1W-NC113 CJ1W-NC213 CJ1W-NC413 CJ1W-NC133 CJ1W-NC233 CJ1W-NC433	Refer to *Appendix 6. Comparison of Special I/O Units* or *CJ- series Position Control Units Operation Manual* (Cat. No. W477) for details. The following conversion cables can be used for replacement with CJ1W-NC□□3. Conversion cable: CJ1W-CM213-NC For details on the conversion cables, refer to the *CS I/O Terminal Block Conversion Adapters・Conversion Cables Datasheet* (Cat. No. P169).
	[CPU Unit + Pulse I/O Module] CJ3M/CJ2M-CPU1□ + CJ2M-MD21□	CJ3M/CJ2M -CPU1□ and CJ2M-MD21□ are required. Refer to the CJ3M/CJ2M *CPU Unit Pulse I/O Module User's Manual* (Cat. No. W486) for details.
[Motion Control Unit] CS1W-MC421-V1 CS1W-MC221-V1	[Motion Control Unit] No replacement model	The CJ Series does not provide a Motion Control Unit. Use a Position Control Unit instead.
[ID Sensor Unit] CS1W-V680C11 CS1W-V680C12 CS1W-V600C11 CS1W-V600C12	[ID Sensor Unit] CJ1W-V680C11 CJ1W-V680C12	Refer to the *CS/CJ-series ID Sensor Units Operation Manual* (Cat. No. Z174) for details.
[GP-IB Interface Unit] CS1W-GPI01	[GP-IB Interface Unit] No replacement model	The CJ Series does not provide a GP-IB Interface Unit. Use another Interface Unit such as RS232 instead.
[High-speed Storage and Processing Unit] CS1W-SPU01-V2 CS1W-SPU02-V2	[High-speed Storage and Processing Unit] CJ1W-SPU01-V2	The same Ethernet cable can be used. Refer to the *CS/CJ-series SYSMAC SPU Units Operation Manual* (Cat. No. V229) for details.
[Motion Control Unit] CS1W-MCH71	[Position Control Unit] CJ1W-NC□71 CJ1W-MCH71 is discontinued.	The CJ Series does not provide a Motion Control Unit. Use a CJ1W-NC□71 Position Control Unit instead. Refer to the *CS/CJ-series Position Control Units Operation Manual* (Cat. No. W426) for details.

■ How to Use a Terminal Block Conversion Adapter

To replace CS1 with CJ3/CJ2, rewiring or inserting a Terminal Block Conversion Adapter is necessary to connect to the CJ1W Unit since the CJ1W Unit does not support the CS1W Unit's I/O terminal block as is.

Rewiring would require a lot of time and effort to conduct and confirm the result, so we provide a Terminal Block Conversion Adapter to allow using the wired terminal block of the CS1 Unit.

Adopting a Terminal Block Conversion Adapter will make the replacement more efficient.

For details on the Terminal Block Conversion Adapter, refer to the *CS I/O Terminal Block Conversion Adapters・Conversion Cables Datasheet* (Cat. No. P169).

How to replace	Description	Illustration
Rewire.	[Procedure] ・ Disconnect the wires from the CS1 Unit's terminal block. ・ Replace the CS1 Unit with the CJ1 Unit. ・ Connect the disconnected wires to the CJ1 Unit's terminal block. [Advantage] ・ The wiring can be tidy. ・ No additional part (Terminal Block Conversion Adapter) is necessary. [Drawback] ・ Conducting the work and confirming the result will take a long time.	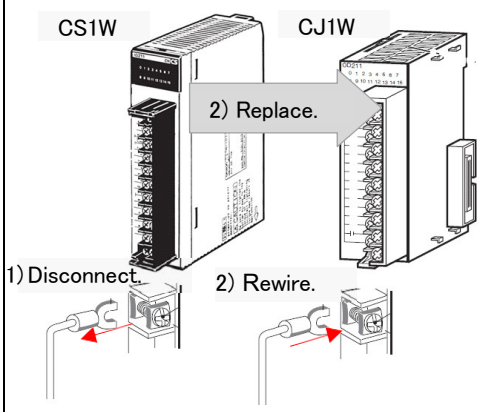
Use a terminal block conversion adapter.	[Procedure] ・ Disconnect the terminal block from the CS1 Unit. ・ Replace the CS1 Unit with the CJ1 Unit. ・ Connect the Terminal Block Conversion Adapter to the CJ1 Unit. ・ Connect the CS1 terminal block to the Terminal Block Conversion Adapter. [Advantage] ・ Reduced time and effort to wire ・ Reduced time to confirm the wiring result ・ Less risk of wrong wiring [Drawback] ・ Increased depth ・ If using a Terminal Block Conversion Adapter causes interference with an I/O connection cable, etc. of an adjacent unit, create a space by attaching a Space Unit (CJ1W-SP001). ・ Use a reinforcing bracket (optional) if necessary in an environment with vibrations and impacts. For details on the CS1 Terminal Block Conversion Adapter, refer to the *CS I/O Terminal Block Conversion Adapters・Conversion Cables Datasheet* (Cat. No. P169).	■ CJ1W-AT601/602/AT611/AT612 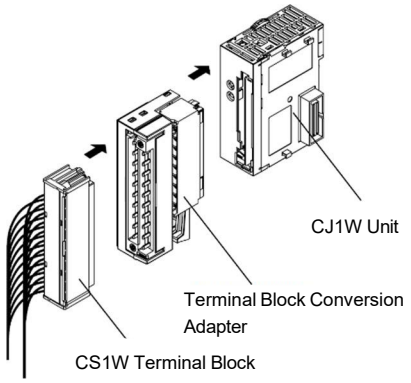 ■ CJ1W-AT641/AT681/AT682 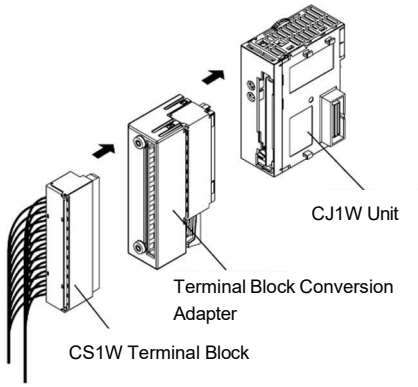

Appendix 6. Comparison of Special I/O Units

Appendix 6.1. CS1W-AD041-V1

(1) Selection of a replacement model and notes for replacement

Replacement model	Notes and restrictions
CJ1W-AD041-V1	● Equivalent in the functions and capabilities. ● The CIO areas and DM areas remain the same. ● Different in the conversion data during restarting.

(2) Differences in functions and capabilities

Item	CS1W-AD041-V1	CJ1W-AD041-V1	
	Specifications	Difference	Specifications
Number of inputs	4	○	4
Input signal range selection	Selectable for 4 points individually	○	Selectable for 4 points individually
Signal range	1 to 5 V, 0 to 5 V, 0 to 10 V, -10 to 10 V, 4 to 20 mA	○	1 to 5 V, 0 to 5 V, 0 to 10 V, -10 to 10 V, 4 to 20 mA
Maximum rated input	Voltage input: ±15 V Current input: ±30 mA	○	Voltage input: ±15 V Current input: ±30 mA
Input impedance	Voltage input: 1 MΩ min. Current input: 250 Ω (fixed)	○	Voltage input: 1 MΩ min. Current input: 250 Ω (fixed)
Resolution	4,000/8,000	○	4,000/8,000
A/D conversion output data	16-bit binary data	○	16-bit binary data
Overall accuracy	23±2ºC Voltage input: ±0.2% of F.S. Current input: ±0.4% of F.S. 0 to 55ºC Voltage input: ±0.4% of F.S. Current input: ±0.6% of F.S.	○	23±2ºC Voltage input: ±0.2% of F.S. Current input: ±0.4% of F.S. 0 to 55ºC Voltage input: ±0.4% of F.S. Current input: ±0.6% of F.S.
A/D conversion period	1 ms/250 μs (per input point)	○	1 ms/250 μs (per input point)
Mean value processing	Stores the last “n” data conversions in the buffer, and stores the mean value of the conversion values. Number of mean value buffers: n = 2, 4, 8, 16, 32, 64	○	Stores the last “n” data conversions in the buffer, and stores the mean value of the conversion values. Number of mean value buffers: n = 2, 4, 8, 16, 32, 64
Peak hold	Stores the maximum conversion value while the peak value hold bit is ON.	○	Stores the maximum conversion value while the peak value hold bit is ON.
Disconnection detection	Detects the disconnection and turns ON the disconnection detection flag.	○	Detects the disconnection and turns ON the disconnection detection flag.
Scaling	Not provided	○	Not provided
Offset and gain adjustment	Provided	○	Provided
Direct conversion	Not provided	○	Not provided
Isolation	Photocoupler isolation between input and PLC signals (No insulation between inputs)	○	Photocoupler isolation between input and PLC signals (No insulation between inputs)

Difference: Enhanced (◎), Equivalent (○), Degraded (△), or Incompatible feature (×)

(3) Differences in memory area allocations

The memory area allocations remain the same.

(4) Differences in wiring and terminal arrangement

CS1W-AD041-V1	CJ1W-AD041-V1
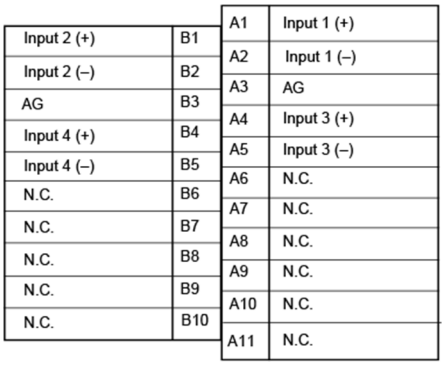	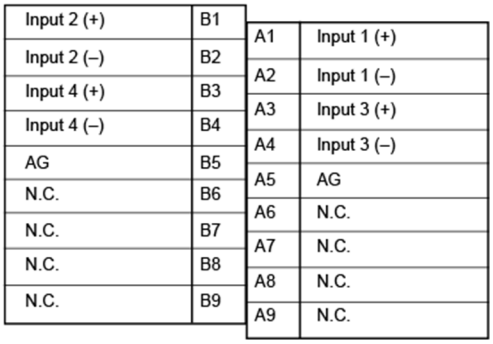

(5) Differences in behavior in case of an error or alarm

- When restarting the Unit

  Different in the conversion data during restarting.

CS1W-AD041-V1	CJ1W-AD041-V1
The conversion data during restarting will become **“0000”**.	The conversion data **immediately before restarting will be retained**.

Reference manuals

CS1W-AD041-V1: *CS/CJ-series Analog I/O Units Operation Manual* (Cat. No. W345)

CJ1W-AD041-V1: *CS/CJ-series Analog I/O Units Operation Manual* (Cat. No. W345)

Appendix 6.2. CS1W-AD081-V1

(1) Selection of a replacement model and notes for replacement

Replacement model	Notes and restrictions
CJ1W-AD081-V1	● Equivalent in the functions and capabilities. ● The CIO areas and DM areas remain the same. ● Different in the conversion data during restarting.

(2) Differences in functions and capabilities

Item	CS1W-AD081-V1	CJ1W-AD081-V1	
	Specifications	Difference	Specifications
Number of inputs	8	○	8
Input signal range selection	Selectable for 8 points individually	○	Selectable for 8 points individually
Signal range	1 to 5 V, 0 to 5 V, 0 to 10 V, -10 to 10 V, 4 to 20 mA	○	1 to 5 V, 0 to 5 V, 0 to 10 V, -10 to 10 V, 4 to 20 mA
Maximum rated input	Voltage input: ±15 V Current input: ±30 mA	○	Voltage input: ±15 V Current input: ±30 mA
Input impedance	Voltage input: 1 MΩ min. Current input: 250 Ω (fixed)	○	Voltage input: 1 MΩ min. Current input: 250 Ω (fixed)
Resolution	4,000/8,000	○	4,000/8,000
A/D conversion output data	16-bit binary data	○	16-bit binary data
Overall accuracy	23±2ºC Voltage input: ±0.2% of F.S. Current input: ±0.4% of F.S. 0 to 55ºC Voltage input: ±0.4% of F.S. Current input: ±0.6% of F.S.	○	23±2ºC Voltage input: ±0.2% of F.S. Current input: ±0.4% of F.S. 0 to 55ºC Voltage input: ±0.4% of F.S. Current input: ±0.6% of F.S.
A/D conversion period (per input point)	1 ms/250 μs	○	1 ms/250 μs
Mean value processing	Stores the last “n” data conversions in the buffer, and stores the mean value of the conversion values. Number of mean value buffers: n = 2, 4, 8, 16, 32, 64	○	Stores the last “n” data conversions in the buffer, and stores the mean value of the conversion values. Number of mean value buffers: n = 2, 4, 8, 16, 32, 64
Peak hold	Stores the maximum conversion value while the peak value hold bit is ON.	○	Stores the maximum conversion value while the peak value hold bit is ON.
Disconnection detection	Detects the disconnection and turns ON the disconnection detection flag.	○	Detects the disconnection and turns ON the disconnection detection flag.
Scaling	Not provided	○	Not provided
Offset and gain adjustment	Provided	○	Provided
Isolation	Photocoupler isolation between input and PLC signals (No insulation between inputs)	○	Photocoupler isolation between input and PLC signals (No insulation between inputs)

Difference: Enhanced (◎), Equivalent (○), Degraded (△), or Incompatible feature (×)

(3) Differences in memory area allocations

The memory area allocations remain the same.

(4) Differences in wiring and terminal arrangement

CS1W-AD081-V1	CJ1W-AD081-V1
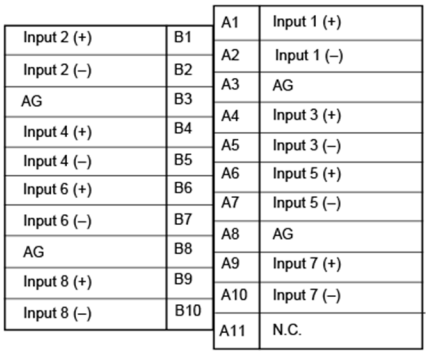	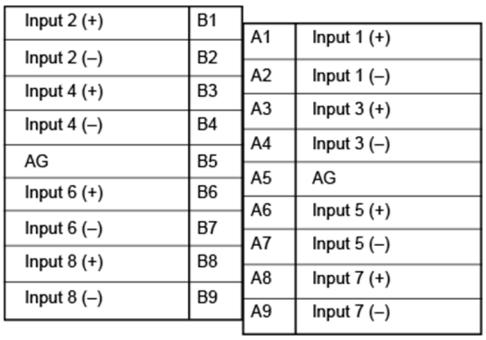

(5) Differences in behavior in case of an error or alarm

・ When restarting the Unit

Different in the conversion data during restarting.

CS1W-AD081-V1	CJ1W-AD081-V1
The conversion data during restarting will become **“0000”**.	The conversion data **immediately before restarting will be retained**.

Reference manuals

CS1W-AD081-V1: *CS/CJ-series Analog I/O Units Operation Manual* (Cat. No. W345)

CJ1W-AD081-V1: *CS/CJ-series Analog I/O Units Operation Manual* (Cat. No. W345)

Appendix 6.3. CS1W-AD161

(1) Selection of a replacement model and notes for replacement

Replacement model	Notes and restrictions
CJ1W-AD081-V1	● Different in the number of input points. For 16 input points, two CJ1W-AD081-V1 Units are necessary. ● Some degradation in capabilities ・ Overall accuracy (23±2ºC): Current input ±0.2% of F.S. ⇒ ±0.4% of F.S. (0 to 55ºC): Current input ±0.4% of F.S. ⇒ ±0.6% of F.S. ● Some degradation in capability ・ Scaling is not provided. ● Different in the CIO areas and DM areas. ● Different in the conversion data during restarting.

(2) Differences in functions and capabilities

Item	CS1W-AD161	CJ1W-AD081-V1	
	Specifications	Difference	Specifications
Number of inputs	16	×	8
Input signal range selection	Selectable for 16 points individually	○	Selectable for 8 points individually
Signal range	1 to 5 V, 0 to 5 V, 0 to 10 V, -10 to 10 V, 4 to 20 mA	○	1 to 5 V, 0 to 5 V, 0 to 10 V, -10 to 10 V, 4 to 20 mA
Maximum rated input	Voltage input: ±15 V Current input: ±30 mA	○	Voltage input: ±15 V Current input: ±30 mA
Input impedance	Voltage input: 1 MΩ min. Current input: 250 Ω (fixed)	○	Voltage input: 1 MΩ min. Current input: 250 Ω (fixed)
Resolution	4,000/8,000	○	4,000/8,000
A/D conversion output data	16-bit binary data	○	16-bit binary data
Overall accuracy	23±2ºC Voltage input: ±0.2% of F.S. Current input: ±0.2% of F.S. 0 to 55ºC Voltage input: ±0.4% of F.S. Current input: ±0.4% of F.S.	△	23±2ºC Voltage input: ±0.2% of F.S. Current input: ±0.4% of F.S. 0 to 55ºC Voltage input: ±0.4% of F.S. Current input: ±0.6% of F.S.
A/D conversion period (per input point)	1 ms/250 μs	○	1 ms/250 μs
Mean value processing	Stores the last “n” data conversions in the buffer, and stores the mean value of the conversion values. Number of mean value buffers: n = 2, 4, 8, 16, 32, 64	○	Stores the last “n” data conversions in the buffer, and stores the mean value of the conversion values. Number of mean value buffers: n = 2, 4, 8, 16, 32, 64
Peak hold	Stores the maximum conversion value while the peak value hold bit is ON.	○	Stores the maximum conversion value while the peak value hold bit is ON.
Disconnection detection	Detects the disconnection and turns ON the disconnection detection flag.	○	Detects the disconnection and turns ON the disconnection detection flag.
Scaling	Provided Enabled only for conversion time of 1 ms and resolution of 4,000. Setting any values within a range of ±32,000 as the upper and lower limits allows the A/D conversion result to be output with these values as full scale.	×	Not provided
Offset and gain adjustment	Provided	○	Provided
Isolation	Photocoupler isolation between input and PLC signals (No insulation between inputs)	○	Photocoupler isolation between input and PLC signals (No insulation between inputs)

Difference: Enhanced (◎), Equivalent (○), Degraded (△), or Incompatible feature (×)

(3) Differences in memory area allocations

■ CIO Areas

Differences in CIO areas

The first word of the first CJ1W-AD081-V1 Unit and the first word of CS1W-AD161: n = 2000 + Unit No. x 10

The first word of the second CJ1W-AD081-V1 Unit: n2 = 2000 + the second Unit’s Unit No. x 10

Name		CS1W-AD161		CJ1W-AD081-V1		Remarks
		Word	Bit	Word	Bit	
Peak hold	Input 1	n	00	n	00	The allocation of the first CJ1W-AD081-V1 Unit remains the same.
	Input 2		01		01	
	Input 3		02		02	
	Input 4		03		03	
	Input 5		04		04	
	Input 6		05		05	
	Input 7		06		06	
	Input 8		07		07	
	Input 9		08	n2 (Second Unit)	00	The area allocations of the second CJ1W-AD081-V1 Unit changes since it has a different Unit No.
	Input 10		09		01	
	Input 11		10		02	
	Input 12		11		03	
	Input 13		12		04	
	Input 14		13		05	
	Input 15		14		06	
	Input 16		15		07	
A/D converted value	Input 1	n+1		n+1		The allocation of the first CJ1W-AD081-V1 Unit remains the same.
	Input 2	n+2		n+2		
	Input 3	n+3		n+3		
	Input 4	n+4		n+4		
	Input 5	n+5		n+5		
	Input 6	n+6		n+6		
	Input 7	n+7		n+7		
	Input 8	n+8		n+8		
	Input 9	n+9		n2+1		The area allocations of the second CJ1W-AD081-V1 Unit changes since it has a different Unit No.
	Input 10	n+10		n2+2		
	Input 11	n+11		n2+3		
	Input 12	n+12		n2+4		
	Input 13	n+13		n2+5		
	Input 14	n+14		n2+6		
	Input 15	n+15		n2+7		
	Input 16	n+16		n2+8		
Disconnection detection	Input 1	n+18	00	n+9	00	The area allocations of the first CJ1W-AD081-V1 Unit changes.
	Input 2		01		01	
	Input 3		02		02	
	Input 4		03		03	
	Input 5		04		04	
	Input 6		05		05	
	Input 7		06		06	
	Input 8		07		07	
	Input 9		08	n2+9	00	The area allocations of the second CJ1W-AD081-V1 Unit changes since it has a different Unit No.
	Input 10		09		01	
	Input 11		10		02	
	Input 12		11		03	
	Input 13		12		04	
	Input 14		13		05	
	Input 15		14		06	
	Input 16		15		07	
Alarm flag	Scaling setting error	n+19	08	n+9 (n2+9)	Not used	CJ1W-AD081-V1 does not provide scaling.
	Mean value processing setting error		11		11	
	Conversion period and operation mode setting error		12		Not used	CJ1W-AD081-V1 does not provide a conversion period and operation mode setting error flag.
	Operating in adjustment mode		15		15	

■ DM Areas

・ The area allocations change. Replace them by referring to the manual.

The first word of the first CJ1W-AD081-V1 Unit and the first word of CS1W-AD161: m = D20000 + Unit No. x 100

The first word of the second CJ1W-AD081-V1 Unit: m2 = D20000 + the second Unit's number x 100

Name		CS1W-AD161		CJ1W-AD081-V1		Remarks
		Word	Bit	Word	Bit	
Use setting	Input 1	m	00	m	00	The allocation of the first CJ1W-AD081-V1 Unit remains the same.
	Input 2		01		01	
	Input 3		02		02	
	Input 4		03		03	
	Input 5		04		04	
	Input 6		05		05	
	Input 7		06		06	
	Input 8		07		07	
	Input 9		08	m2 (Second Unit)	00	The area allocations of the second CJ1W-AD081-V1 Unit changes since it has a different Unit No.
	Input 10		09		01	
	Input 11		10		02	
	Input 12		11		03	
	Input 13		12		04	
	Input 14		13		05	
	Input 15		14		06	
	Input 16		15		07	
Input range setting	Input 1 to 8	m+1		m+1		
	Input 9 to 16	m+2		m2+1		Set the allocation on the second CJ1W-AD081-V1 Unit.
Mean Value Processing Setting	Input 1	m+3		m+2		The area allocations of the first CJ1W-AD081-V1 Unit changes.
	Input 2	m+4		m+3		
	Input 3	m+5		m+4		
	Input 4	m+6		m+5		
	Input 5	m+7		m+6		
	Input 6	m+8		m+7		
	Input 7	m+9		m+8		
	Input 8	m+10		m+9		
	Input 9	m+11		m2+2		The area allocations of the second CJ1W-AD081-V1 Unit changes since it has a different Unit No.
	Input 10	m+12		m2+3		
	Input 11	m+13		m2+4		
	Input 12	m+14		m2+5		
	Input 13	m+15		m2+6		
	Input 14	m+16		m2+7		
	Input 15	m+17		m2+8		
	Input 16	m+18		m2+9		
Operation mode setting		m+19	00 to 07	m+18 m2+18	00 to 07	Set the allocation on the first and second CJ1W-AD081-V1 Units respectively.
Conversion period/resolution setting		m+19	08 to 15	m+18 m2+18	08 to 15	Set the allocation on the first and second CJ1W-AD081-V1 Units respectively.
Scaling		m+20 to m+51		Not provided		CJ1W-AD081-V1 does not provide scaling.
Voltage/current range setting		m+52		Not provided		For CJ1W-AD081-V1, use the voltage/current input setting switch in the back of the terminal block to switch between the 1 to 5 V voltage input and the 4 to 20 mA current input.

(4) Differences in wiring and terminal arrangement

<table>
<tr><th>CS1W-AD161</th><th>CJ1W-AD081-V1</th></tr>
<tr><td>
CN2 Inputs 9 to16

Input 9+	1	2	Input 10+
Current mode 9	3	4	Current mode 10
Input 9–	5	6	Input 10–
AG	7	8	AG
Input 11+	9	10	Input 12+
Current mode 11	11	12	Current mode 12
Input 11–	13	14	Input 12–
AG	15	16	AG
Input 13+	17	18	Input 14+
Current mode 13	19	20	Current mode 14
Input 13–	21	22	Input 14–
AG	23	24	AG
Input 15+	25	26	Input 16+
Current mode 15	27	28	Current mode 16
Input 15–	29	30	Input 16–
AG	31	32	AG
NC	33	34	NC

CN1 Inputs 1 to 8

Input 1+	1	2	Input 2+
Current mode 1	3	4	Current mode 2
Input 1–	5	6	Input 2–
AG	7	8	AG
Input 3+	9	10	Input 4+
Current mode 3	11	12	Current mode 4
Input 3–	13	14	Input 4–
AG	15	16	AG
Input 15+	17	18	Input 6+
Current mode 5	19	20	Current mode 6
Input 5–	21	22	Input 6–
AG	23	24	AG
Input 7+	25	26	Input 8+
Current mode 7	27	28	Current mode 8
Input 7–	29	30	Input 8–
AG	31	32	AG
NC	33	34	NC
</td><td>

Input 2 (+)	B1
Input 2 (–)	B2
Input 4 (+)	B3
Input 4 (–)	B4
AG	B5
Input 6 (+)	B6
Input 6 (–)	B7
Input 8 (+)	B8
Input 8 (–)	B9

A1	Input 1 (+)
A2	Input 1 (–)
A3	Input 3 (+)
A4	Input 3 (–)
A5	AG
A6	Input 5 (+)
A7	Input 5 (–)
A8	Input 7 (+)
A9	Input 7 (–)
</td></tr>
</table>

(5) Differences in behavior in case of an error or alarm

- When restarting the Unit

  Different in the conversion data during restarting.

CS1W-AD161	CJ1W-AD081-V1
The conversion data during restarting will become **“0000”**.	The conversion data **immediately before restarting will be retained**.

Reference manuals

CS1W-AD161: *CS/CJ-series Analog I/O Units Operation Manual* (Cat. No. W345)

CJ1W-AD081-V1: *CS/CJ-series Analog I/O Units Operation Manual* (Cat. No. W345)

Appendix 6.4. CS1W-DA041

(1) Selection of a replacement model and notes for replacement

Replacement model	Notes and restrictions
CJ1W-DA041	● Equivalent in the functions and capabilities. ● The CIO areas and DM areas remain the same.

(2) Differences in functions and capabilities

Item	CS1W-DA041	CJ1W-DA041	
	Specifications	Difference	Specifications
Number of outputs	4	○	4
Input signal range selection	Selectable for 4 points individually	○	Selectable for 4 points individually
Signal range	1 to 5 V/4 to 20 mA, 0 to 5 V, 0 to 10 V, -10 to 10 V	○	1 to 5 V/4 to 20 mA, 0 to 5 V, 0 to 10 V, -10 to 10 V
External output impedance	Voltage output: 0.5 Ω max. Current output: -	○	Voltage output: 0.5 Ω max. Current output: -
Maximum external output current (per point)	Voltage output: 12 mA Current output: -	○	Voltage output: 12 mA Current output: -
Maximum allowable load resistance	600 Ω (current output)	○	600 Ω (current output)
Resolution	4,000	○	4,000
Set data	16-bit binary data	○	16-bit binary data
Overall accuracy	23±2ºC Voltage output: ±0.3% of F.S. Current output: ±0.5% of F.S. 0 to 55ºC Voltage output: ±0.5% of F.S. Current output: ±0.8% of F.S.	○	25ºC Voltage output: ±0.3% of F.S. Current output: ±0.5% of F.S. 0 to 55ºC Voltage output: ±0.5% of F.S. Current output: ±0.8% of F.S.
D/A conversion period	1.0 ms max./point	○	1.0 ms max./point
Output hold	Outputs the specified output status (CLR, HOLD, or MAX) under any of the following circumstances. ・ When the output conversion enable bit is OFF. ・ In adjustment mode, when a value other than the output number is output during adjustment. ・ When there is an output setting error or a fatal error occurs at the PLC. ・ When the load is OFF.	○	Outputs the specified output status (CLR, HOLD, or MAX) under any of the following circumstances. ・ When the output conversion enable bit is OFF. ・ In adjustment mode, when a value other than the output number is output during adjustment. ・ When there is an output setting error or a fatal error occurs at the PLC. ・ When the load is OFF.
Isolation	Photocoupler isolation between outputs and PLC signals (No insulation between outputs)	○	Photocoupler isolation between outputs and PLC signals (No insulation between outputs)

Difference: Enhanced (◎), Equivalent (○), Degraded (△), or Incompatible feature (×)

(3) Differences in memory area allocations

The memory area allocations remain the same.

(4) Differences in wiring and terminal arrangement

CS1W-DA041	CJ1W-DA041
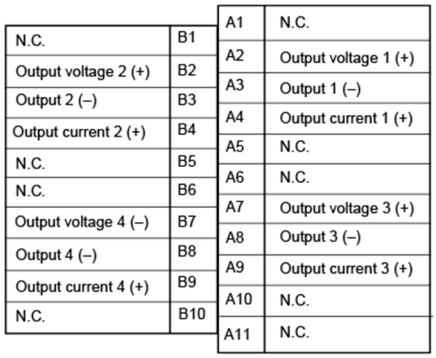	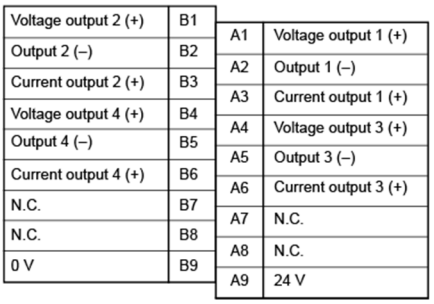

Reference manuals

CS1W-DA08C: *CS/CJ-series Analog I/O Units Operation Manual* (Cat. No. W345)

CJ1W-DA08C: *CS/CJ-series Analog I/O Units Operation Manual* (Cat. No. W345)

Appendix 6.5. CS1W-DA08V

(1) Selection of a replacement model and notes for replacement

Replacement model	Notes and restrictions
CJ1W-DA08V	● Different in some capabilities. Maximum external output current (per point): 12 mA ⇒ 2.4 mA ● The CIO areas and DM areas remain the same. Additional setting work is necessary for functions (such as scaling) provided by CJ1W-DA08V only.

(2) Differences in functions and capabilities

Item	CS1W-DA08V	CJ1W-DA08V	
	Specifications	Difference	Specifications
Number of outputs	8	○	8
Input signal range selection	Selectable for 8 points individually	○	Selectable for 8 points individually
Signal range	1 to 5 V, 0 to 5 V, 0 to 10 V, -10 to 10 V	○	1 to 5 V, 0 to 5 V, 0 to 10 V, -10 to 10 V
External output impedance	0.5 Ω max.	○	0.5 Ω max.
Maximum external output current (per point)	12 mA	△	2.4 mA
Resolution	4,000	◎	4,000/8,000
Set data	16-bit binary data	○	16-bit binary data
Overall accuracy	23±2ºC Voltage output: ±0.3% of F.S. 0 to 55ºC Voltage output: ±0.5% of F.S.	○	25ºC Voltage output: ±0.3% of F.S. 0 to 55ºC Voltage output: ±0.5% of F.S.
D/A conversion period	1.0 ms max./point	◎	1.0 ms/250 μs max./point
Output hold	Outputs the specified output status (CLR, HOLD, or MAX) under any of the following circumstances. ・ When the output conversion enable bit is OFF. ・ In adjustment mode, when a value other than the output number is output during adjustment. ・ When there is an output setting error or a fatal error occurs at the PLC. ・ When the load is OFF.	○	Outputs the specified output status (CLR, HOLD, or MAX) under any of the following circumstances. ・ When the output conversion enable bit is OFF. ・ In adjustment mode, when a value other than the output number is output during adjustment. ・ When there is an output setting error or a fatal error occurs at the PLC. ・ When the load is OFF.
Scaling	Not provided	◎	Provided Enabled only for conversion time of 1 ms and resolution of 4,000. Setting any values in a specific engineering unit within a range of ±32,000 as the upper and lower limits allows the D/A conversion result to be output as an analog signal with these values as full scale.
Isolation	Photocoupler isolation between outputs and PLC signals (No insulation between outputs)	○	Photocoupler isolation between outputs and PLC signals (No insulation between outputs)

Difference: Enhanced (◎), Equivalent (○), Degraded (△), or Incompatible feature (×)

(3) Differences in memory area allocations

■ CIO Areas

・ CJ1W-DA08V newly supports the following areas.

Name		CJ1W-DA08V		Remarks
		Word	Bit	
Alarm flag	Scaling setting error	n+9	08	
	Conversion period and operation mode setting error		12	

■ DM Areas

・ CJ1W-DA08V newly supports the following areas.

Name		CJ1W-DA08V		Remarks
		Word	Bit	
Operation mode setting		m+18	00 to 07	CS1W-DA08V does not provide an operation mode setting switch. Use D (m+18) DM area to switch operation modes.
Conversion period/resolution setting		m+18	08 to 15	Select from the following: 1 ms/4,000 250 μs/8,000
Scaling	Output 1 lower limit	m+19		
	Output 1 upper limit	m+20		
	Output 2 lower limit	m+21		
	Output 2 upper limit	m+22		
	Output 3 lower limit	m+23		
	Output 3 upper limit	m+24		
	Output 4 lower limit	m+25		
	Output 4 upper limit	m+26		
	Output 5 lower limit	m+27		
	Output 5 upper limit	m+28		
	Output 6 lower limit	m+29		
	Output 6 upper limit	m+30		
	Output 7 lower limit	m+31		
	Output 7 upper limit	m+32		
	Output 8 lower limit	m+33		
	Output 8 upper limit	m+34		

(4) Differences in wiring and terminal arrangement

CS1W-DA08V	CJ1W-DA08V
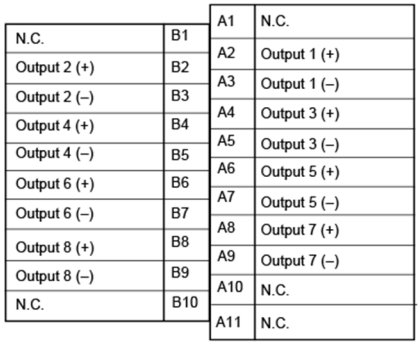	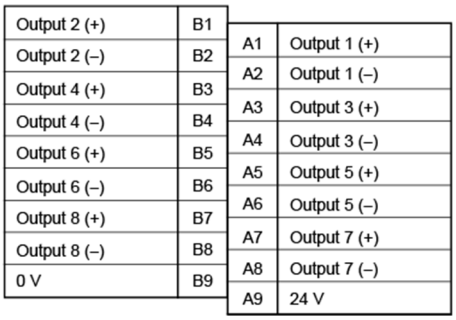

Reference manuals

CS1W-DA08V: *CS/CJ-series Analog I/O Units Operation Manual* (Cat. No. W345)

CJ1W-DA08V: *CS/CJ-series Analog I/O Units Operation Manual* (Cat. No. W345)

Appendix 6.6. CS1W-DA08C

(1) Selection of a replacement model and notes for replacement

Replacement model	Notes and restrictions
CJ1W-DA08C	● Different in some capabilities. Maximum allowable load resistance: 600 Ω ⇒ 350 Ω ● The CIO areas and DM areas remain the same. Additional setting work is necessary for functions (such as scaling) provided by CJ1W-DA08C only.

(2) Differences in functions and capabilities

Item	CS1W-DA08C	CJ1W-DA08C	
	Specifications	Difference	Specifications
Number of outputs	8	○	8
Input signal range selection	Selectable for 8 points individually	○	Selectable for 8 points individually
Signal range	4 to 20 mA	○	4 to 20 mA
Maximum allowable load resistance	600 Ω	△	350 Ω
Resolution	4,000	◎	4,000/8,000
Set data	16-bit binary data	○	16-bit binary data
Overall accuracy	23±2ºC Current output: ±0.5% of F.S. 0 to 55ºC Current output: ±0.8% of F.S.	◎	25ºC Current output: ±0.3% of F.S. 0 to 55ºC Current output: ±0.6% of F.S.
D/A conversion period	1.0 ms max./point	◎	1.0 ms/250 μs max./point
Output hold	Outputs the specified output status (CLR, HOLD, or MAX) under any of the following circumstances. ・ When the output conversion enable bit is OFF. ・ In adjustment mode, when a value other than the output number is output during adjustment. ・ When there is an output setting error or a fatal error occurs at the PLC. ・ When the load is OFF.	○	Outputs the specified output status (CLR, HOLD, or MAX) under any of the following circumstances. ・ When the output conversion enable bit is OFF. ・ In adjustment mode, when a value other than the output number is output during adjustment. ・ When there is an output setting error or a fatal error occurs at the PLC. ・ When the load is OFF.
Scaling	Not provided	◎	Provided Enabled only for conversion time of 1 ms and resolution of 4,000. Setting any values in a specific engineering unit within a range of ±32,000 as the upper and lower limits allows the D/A conversion result to be output as an analog signal with these values as full scale.
Isolation	Photocoupler isolation between outputs and PLC signals (No insulation between outputs)	○	Photocoupler isolation between outputs and PLC signals (No insulation between outputs)

Difference: Enhanced (◎), Equivalent (○), Degraded (△), or Incompatible feature (×)

(3) Differences in memory area allocations

■ CIO Areas

・ CJ1W-DA08C newly supports the following areas.

Name		CJ1W-DA08C		Remarks
		Word	Bit	
Alarm flag	Scaling setting error	n+9	08	
	Conversion period and operation mode setting error		12	

■ DM Areas

・ CJ1W-DA08C newly supports the following areas.

Name		CJ1W-DA08C		Remarks
		Word	Bit	
Operation mode setting		m+18	00 to 07	CS1W-DA08C does not provide an operation mode setting switch. Use D (m+18) DM area to switch operation modes.
Conversion period/resolution setting		m+18	08 to 15	Select from the following: 1 ms/4,000 250 μs/8,000
Scaling	Output 1 lower limit	m+19		
	Output 1 upper limit	m+20		
	Output 2 lower limit	m+21		
	Output 2 upper limit	m+22		
	Output 3 lower limit	m+23		
	Output 3 upper limit	m+24		
	Output 4 lower limit	m+25		
	Output 4 upper limit	m+26		
	Output 5 lower limit	m+27		
	Output 5 upper limit	m+28		
	Output 6 lower limit	m+29		
	Output 6 upper limit	m+30		
	Output 7 lower limit	m+31		
	Output 7 upper limit	m+32		
	Output 8 lower limit	m+33		
	Output 8 upper limit	m+34		

(4) Differences in wiring and terminal arrangement

CS1W-DA08C	CJ1W-DA08C
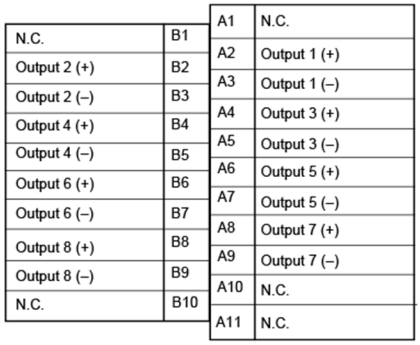	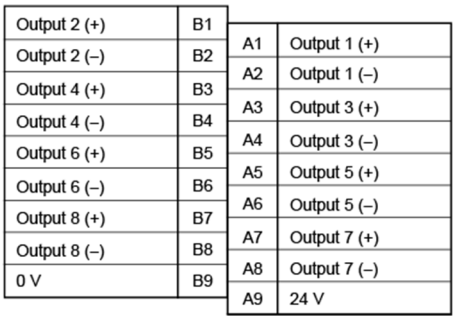

Reference manuals

CS1W-DA08C: *CS/CJ-series Analog I/O Units Operation Manual* (Cat. No. W345)

CJ1W-DA08C: *CS/CJ-series Analog I/O Units Operation Manual* (Cat. No. W345)

Appendix 6.7. CS1W-MAD44

(1) Selection of a replacement model and notes for replacement

Replacement model	Notes and restrictions
CJ1W-MAD42	● Different in the number of output points. ● Different in some capabilities. Maximum external output current (per point): 12 mA ⇒ 2.4 mA ● Different in the CIO areas and DM areas.
CJ1W-AD041-V1 + CJ1W-DA041	● Different in some functions. Ratio conversion is not provided. ● Different in the CIO areas and DM areas.

(2) Differences in functions and capabilities

■ Replacing with CJ1W-MAD42

Item		CS1W-MAD44	CJ1W-MAD42	
		Specifications	Difference	Specifications
Input section	Number of inputs	4	○	4
	Input signal range selection	Selectable for 4 points individually	○	Selectable for 4 points individually
	Signal range	1 to 5 V, 0 to 5 V, 0 to 10 V, -10 to 10 V, 4 to 20 mA	○	1 to 5 V, 0 to 5 V, 0 to 10 V, -10 to 10 V, 4 to 20 mA
	Maximum rated input	Voltage input: ±15 V Current input: ±30 mA	○	Voltage input: ±15 V Current input: ±30 mA
	Input impedance	Voltage input: 1 MΩ min. Current input: 250 Ω (rated)	○	Voltage input: 1 MΩ min. Current input: 250 Ω (rated)
	Resolution	4,000	◎	4,000/8,000
	A/D conversion output data	16-bit binary data	○	16-bit binary data
	Overall accuracy	23±2ºC Voltage input: ±0.2% of F.S. Current input: ±0.4% of F.S. 0 to 55ºC Voltage input: ±0.4% of F.S. Current input: ±0.6% of F.S.	◎	23±2ºC Voltage input: ±0.2% of F.S. Current input: ±0.4% of F.S. 0 to 55ºC Voltage input: ±0.2% of F.S. Current input: ±0.4% of F.S.
	A/D conversion period (per input point)	1 ms	◎	1 ms/500 μs
	Mean value processing	Stores the last “n” data conversions in the buffer, and stores the mean value of the conversion values. Number of mean value buffers: n = 2, 4, 8, 16, 32, 64	○	Stores the last “n” data conversions in the buffer, and stores the mean value of the conversion values. Number of mean value buffers: n = 2, 4, 8, 16, 32, 64
	Peak hold	Stores the maximum conversion value while the peak value hold bit is ON.	○	Stores the maximum conversion value while the peak value hold bit is ON.
	Scaling	Not provided	◎	Provided Enabled only for conversion time of 1 ms and resolution of 4,000. Setting any values within a range of ±32,000 as the upper and lower limits allows the A/D conversion result to be output with these values as full scale.
Output section	Number of outputs	4	△	2
	Input signal range selection	Selectable for 4 points individually	○	Selectable for 2 points individually
	Signal range	1 to 5 V, 0 to 5 V, 0 to 10 V, -10 to 10 V	○	1 to 5 V, 0 to 5 V, 0 to 10 V, -10 to 10 V, 4 to 20 mA
	External output impedance	Voltage output: 0.5 Ω max.	○	Voltage output: 0.5 Ω max. Current output: -
	Maximum external output current (per point)	12 mA	△	2.4 mA
	Maximum allowable load resistance	- (There are no external output signals.)	○	600 Ω (current output)
	Resolution	4,000	◎	4,000/8,000
	Set data	16-bit binary data	○	16-bit binary data

Item		CS1W-MAD44	CJ1W-MAD42	
		Specifications	Difference	Specifications
	Overall accuracy	23±2ºC Voltage output: 0.3% of F.S. Current output: - 0 to 55ºC Voltage output: 0.5% of F.S. Current output: -	○	25ºC Voltage output: 0.3% of F.S. Current output: 0.3% of F.S. 0 to 55ºC Voltage output: 0.5% of F.S. Current output: 0.6% of F.S.
	D/A conversion period	1 ms	◎	1 ms/500 μs
	Output hold	Outputs the specified output status (CLR, HOLD, or MAX) under any of the following circumstances. ・ When the output conversion enable bit is OFF. ・ In adjustment mode, when a value other than the output number is output during adjustment. ・ When there is an output setting error or a fatal error occurs at the PLC. ・ When the load is OFF.	○	Outputs the specified output status (CLR, HOLD, or MAX) under any of the following circumstances. ・ When the output conversion enable bit is OFF. ・ In adjustment mode, when a value other than the output number is output during adjustment. ・ When there is an output setting error or a fatal error occurs at the PLC. ・ When the load is OFF.
	Scaling	Not provided	◎	Provided Enabled only for conversion time of 1 ms and resolution of 4,000. Setting any values within a range of ±32,000 as the upper and lower limits allows the D/A conversion result to be output as an analog signal with these values as full scale.
Ratio conversion		Provided	○	Provided
Isolation		Photocoupler isolation between I/Os and PLC signals (No insulation between I/Os)	○	Photocoupler isolation between I/Os and PLC signals (No insulation between I/Os)

Difference: Enhanced (◎), Equivalent (○), Degraded (△), or Incompatible feature (×)

■ Replacing with CJ1W-AD041-V1 + CJ1W-DA041

Item		CS1W-MAD44	CJ1W-AD041-V1 (input section) + CJ1W-DA041 (output section)	
		Specifications	Difference	Specifications
Input section	Number of inputs	4	○	4
	Input signal range selection	Selectable for 4 points individually	○	Selectable for 4 points individually
	Signal range	1 to 5 V, 0 to 5 V, 0 to 10 V, -10 to 10 V, 4 to 20 mA	○	1 to 5 V, 0 to 5 V, 0 to 10 V, -10 to 10 V, 4 to 20 mA
	Maximum rated input	Voltage input: ±15 V Current input: ±30 mA	○	Voltage input: ±15 V Current input: ±30 mA
	Input impedance	Voltage input: 1 MΩ min. Current input: 250 Ω (rated)	○	Voltage input: 1 MΩ min. Current input: 250 Ω (fixed)
	Resolution	4,000	◎	4,000/8,000
	A/D conversion output data	16-bit binary data	○	16-bit binary data
	Overall accuracy	23±2ºC Voltage input: ±0.2% of F.S. Current input: ±0.4% of F.S. 0 to 55ºC Voltage input: ±0.4% of F.S. Current input: ±0.6% of F.S.	○	23±2ºC Voltage input: ±0.2% of F.S. Current input: ±0.4% of F.S. 0 to 55ºC Voltage input: ±0.4% of F.S. Current input: ±0.6% of F.S.
	A/D conversion period (per input point)	1 ms	◎	1 ms/250 μs (per input point)
	Mean value processing	Stores the last “n” data conversions in the buffer, and stores the mean value of the conversion values. Number of mean value buffers: n = 2, 4, 8, 16, 32, 64	○	Stores the last “n” data conversions in the buffer, and stores the mean value of the conversion values. Number of mean value buffers: n = 2, 4, 8, 16, 32, 64
	Peak hold	Stores the maximum conversion value while the peak value hold bit is ON.	○	Stores the maximum conversion value while the peak value hold bit is ON.
	Scaling	Not provided	○	Not provided

Item		CS1W-MAD44	CJ1W-AD041-V1 (input section) + CJ1W-DA041 (output section)	
		Specifications	Difference	Specifications
	Isolation	Photocoupler isolation between I/Os and PLC signals (No insulation between I/Os)	○	Photocoupler isolation between input and PLC signals (No insulation between inputs)
Output section	Number of outputs	4	○	4
	Input signal range selection	Selectable for 4 points individually	○	Selectable for 4 points individually
	Signal range	1 to 5 V, 0 to 5 V, 0 to 10 V, -10 to 10 V	○	1 to 5 V/4 to 20 mA, 0 to 5 V, 0 to 10 V, -10 to 10 V
	External output impedance	Voltage output: 0.5 Ω max.	○	Voltage output: 0.5 Ω max. Current output: -
	Maximum external output current (per point)	12 mA	○	Voltage output: 12 mA Current output: -
	Maximum allowable load resistance	- (There are no external output signals.)	○	600 Ω (current output)
	Resolution	4,000	○	4,000
	Set data	16-bit binary data	○	16-bit binary data
	Overall accuracy	23±2ºC Voltage output: 0.3% of F.S. Current output: - 0 to 55ºC Voltage output: 0.5% of F.S. Current output: -	○	25ºC Voltage output: ±0.3% of F.S. Current output: ±0.5% of F.S. 0 to 55ºC Voltage output: ±0.5% of F.S. Current output: ±0.8% of F.S.
	D/A conversion period	1 ms	○	1.0 ms max./point
	Output hold	Outputs the specified output status (CLR, HOLD, or MAX) under any of the following circumstances. ・ When the output conversion enable bit is OFF. ・ In adjustment mode, when a value other than the output number is output during adjustment. ・ When there is an output setting error or a fatal error occurs at the PLC. ・ When the load is OFF.	○	Outputs the specified output status (CLR, HOLD, or MAX) under any of the following circumstances. ・ When the output conversion enable bit is OFF. ・ In adjustment mode, when a value other than the output number is output during adjustment. ・ When there is an output setting error or a fatal error occurs at the PLC. ・ When the load is OFF.
	Scaling	Not provided	○	Not provided
	Isolation	Photocoupler isolation between I/Os and PLC signals (No insulation between I/Os)	○	Photocoupler isolation between outputs and PLC signals (No insulation between outputs)
Ratio conversion		Provided	×	Not provided

Difference: Enhanced (◎), Equivalent (○), Degraded (△), or Incompatible feature (×)

(3) Differences in memory area allocations

■ Replacing with CJ1W-MAD42

■ CIO Areas

Differences in CIO areas

Name		CS1W-MAD44		CJ1W-MAD42		Remarks
		Word	Bit	Word	Bit	
Conversion enable	Output 3	n	02	Not used		Not used by CJ1W-MAD42
	Output 4		03	Not used		
Output set value	Output 3	n+3		Not used		Not used by CJ1W-MAD42
	Output 4	n+4		Not used		
Output set value error	Output 3	n+9	02	Not used		Not used by CJ1W-MAD42
	Output 4		03	Not used		

・ CJ1W-MAD42 newly supports the following areas.

Name		CJ1W-MAD42		Remarks
		Word	Bit	
Alarm flag	Scaling setting error	n+9	08	
	Conversion period and resolution/operation mode setting error		12	

■ DM Areas

Differences in DM areas

Name		CS1W-MAD44		CJ1W-MAD42		Remarks
		Word	Bit	Word	Bit	
Output use setting	Output 3	m	02	Not used		Not used by CJ1W-MAD42
	Output 4		03	Not used		
Ratio conversion use setting	Loop 3	m	12 to 13	Not used		Not used by CJ1W-MAD42
	Loop 4		14 to 15	Not used		
Output signal range setting	Output 3	m+1	04 to 05	Not used		Not used by CJ1W-MAD42
	Output 4		06 to 07	Not used		
Output status when conversion stops	Output 3	m+4	00 to 07	Not used		Not used by CJ1W-MAD42
	Output 4	m+5	00 to 07	Not used		
Ratio set value and bias value setting	Loop 3, A constant	m+14		Not used		Not used by CJ1W-MAD42
	Loop 3, B constant	m+15		Not used		
	Loop 4, A constant	m+16		Not used		
	Loop 4, B constant	m+17		Not used		

・ CJ1W-MAD42 newly supports the following areas.

Name		CJ1W-MAD42		Remarks
		Word	Bit	
Operation mode setting		m+18	00 to 07	
Conversion period/resolution setting		m+18	08 to 15	Select from the following: 1 ms/4,000 250 μs/8,000
Scaling	Output 1 lower limit	m+19		
	Output 1 upper limit	m+20		
	Output 2 lower limit	m+21		
	Output 2 upper limit	m+22		
	Input 1 lower limit	m+27		
	Input 1 upper limit	m+28		
	Input 2 lower limit	m+29		
	Input 2 upper limit	m+30		
	Input 3 lower limit	m+31		
	Input 3 upper limit	m+32		
	Input 4 lower limit	m+33		
	Input 4 upper limit	m+34		
Voltage/current range setting (Enabled with 1 to 5 V/4 to 20 mA)	Output 1	m+35	00	This area is used to set voltage output or current output.
	Output 2		01	
	Input 1		04	The voltage/current input setting switch is used to set voltage input or current input.
	Input 2		05	
	Input 3		06	
	Input 4		07	

■ Replacing with CJ1W-AD041-V1 + CJ1W-DA041

■ CIO Areas

Differences in CIO areas

The first word of CJ1W-AD041-V1 and the first word of CS1W-MAD44: n = 2000 + Unit No. × 10

The first word of CJ1W-DA041: n2 = 2000 + the second Unit's number × 10

Name		CS1W-AD161		CJ1W-AD041-V1 + CJ1W-DA041		Remarks
		Word	Bit	Word	Bit	
Conversion enable	Output 1	n	00	n2	00	The area allocations change since the Unit No. is different.
	Output 2		01		01	
	Output 3		02		02	
	Output 4		03		03	

Name		CS1W-AD161		CJ1W-AD041-V1 + CJ1W-DA041		Remarks
		Word	Bit	Word	Bit	
Peak hold	Input 1	n	04	n	00	The area allocations change.
	Input 2		05		01	
	Input 3		06		02	
	Input 4		07		03	
Output set value	Output 1	n+1		n2+1		The area allocations change since the Unit No. is different.
	Output 2	n+2		n2+2		
	Output 3	n+3		n2+3		
	Output 4	n+4		n2+4		
Input conversion value	Input 1	n+5		n+1		The area allocations change.
	Input 2	n+6		n+2		
	Input 3	n+7		n+3		
	Input 4	n+8		n+4		
Output set value error	Output 1	n+9	00	n2+9	00	The area allocations change since the Unit No. is different.
	Output 2		01		01	
	Output 3		02		02	
	Output 4		03		03	
Disconnection detection	Input 1	n+9	04	n+9	00	The area allocations change.
	Input 2		05		01	
	Input 3		06		02	
	Input 4		07		03	

■ DM Areas

Differences in DM areas

Below are the cases for the first word.

The first word of CJ1W-AD041-V1 and the first word of CS1W-MAD44: m = D20000 + Unit No. × 100

The first word of CJ1W-DA041: m2 = D20000 + Unit No. × 100

Name		CS1W-AD161		CJ1W-AD041-V1 + CJ1W-DA041		Remarks
		Word	Bit	Word	Bit	
Output use setting	Output 1	m	00	m2	00	The area allocations change since the Unit No. is different.
	Output 2		01		01	
	Output 3		02		02	
	Output 4		03		03	
Input use setting	Input 1	m	04	m	00	The area allocations change.
	Input 2		05		01	
	Input 3		06		02	
	Input 4		07		03	
Ratio conversion use setting	Loop 1	m	08 to 09	No corresponding area		
	Loop 2		10 to 11			
	Loop 3		12 to 13			
	Loop 4		14 to 15			
Output signal range setting	Output 1	m+1	00 to 01	m2+1	00 to 01	The area allocations change since the Unit No. is different.
	Output 2		02 to 03		02 to 03	
	Output 3		04 to 05		04 to 05	
	Output 4		06 to 07		06 to 07	
Input signal range settings	Input 1	m+1	08 to 09	m+1	00 to 01	The area allocations change.
	Input 2		10 to 11		02 to 03	
	Input 3		12 to 13		04 to 05	
	Input 4		14 to 15		06 to 07	
Output status when conversion stops	Output 1	m+2	00 to 07	m2+2	00 to 07	The area allocations change since the Unit No. is different.
	Output 2	m+3	00 to 07	m2+3	00 to 07	
	Output 3	m+4	00 to 07	m2+4	00 to 07	
	Output 4	m+5	00 to 07	m2+5	00 to 07	
Mean value processing setting	Input 1	m+6		m+2		The area allocations change.
	Input 2	m+7		m+3		
	Input 3	m+8		m+4		
	Input 4	m+9		m+5		
Ratio set value and bias value setting	Loop 1, A constant	m+10		No corresponding area		
	Loop 1, B constant	m+11				
	Loop 2, A constant	m+12				
	Loop 2, B constant	m+13				
	Loop 3, A constant	m+14				
	Loop 3, B constant	m+15				
	Loop 4, A constant	m+16				
	Loop 4, B constant	m+17				

(4) Differences in wiring and terminal arrangement

■ Replacing with CJ1W-MAD42

CS1W-MAD44				CJ1W-MAD42			
Output 2 (+)	B1	A1	Output 1 (+)	Voltage output 2 (+)	B1	A1	Voltage output 1 (+)
Output 2 (–)	B2	A2	Output 1 (–)	Output 2 (–)	B2	A2	Output 1 (–)
Output 4 (+)	B3	A3	Output 3 (+)	Current output 2 (+)	B3	A3	Current output 1 (+)
Output 4 (–)	B4	A4	Output 3 (–)	N.C.	B4	A4	N.C.
N.C.	B5	A5	N.C.	Input 2 (+)	B5	A5	Input 1 (+)
Input 2 (+)	B6	A6	Input 1 (+)	Input 2 (–)	B6	A6	Input 1 (–)
Input 2 (–)	B7	A7	Input 1 (–)	AG	B7	A7	AG
AG	B8	A8	AG	Input 4 (+)	B8	A8	Input 3 (+)
Input 4 (+)	B9	A9	Input 3 (+)	Input 4 (–)	B9	A9	Input 3 (–)
Input 4 (–)	B10	A10	Input 3 (–)				
		A11	N.C.				

■ Replacing with CJ1W-AD041-V1 + CJ1W-DA041

CS1W-MAD44				CJ1W-AD041-V1 + CJ1W-DA041			
Output 2 (+)	B1	A1	Output 1 (+)	CJ1W-AD041-V1			
Output 2 (–)	B2	A2	Output 1 (–)	Input 2 (+)	B1	A1	Input 1 (+)
Output 4 (+)	B3	A3	Output 3 (+)	Input 2 (–)	B2	A2	Input 1 (–)
Output 4 (–)	B4	A4	Output 3 (–)	Input 4 (+)	B3	A3	Input 3 (+)
N.C.	B5	A5	N.C.	Input 4 (–)	B4	A4	Input 3 (–)
Input 2 (+)	B6	A6	Input 1 (+)	AG	B5	A5	AG
Input 2 (–)	B7	A7	Input 1 (–)	N.C.	B6	A6	N.C.
AG	B8	A8	AG	N.C.	B7	A7	N.C.
Input 4 (+)	B9	A9	Input 3 (+)	N.C.	B8	A8	N.C.
Input 4 (–)	B10	A10	Input 3 (–)	N.C.	B9	A9	N.C.
		A11	N.C.	CJ1W-DA041			
				Voltage output 2 (+)	B1	A1	Voltage output 1 (+)
				Output 2 (–)	B2	A2	Output 1 (–)
				Current output 2 (+)	B3	A3	Current output 1 (+)
				Voltage output 4 (+)	B4	A4	Voltage output 3 (+)
				Output 4 (–)	B5	A5	Output 3 (–)
				Current output 4 (+)	B6	A6	Current output 3 (+)
				N.C.	B7	A7	N.C.
				N.C.	B8	A8	N.C.
				0 V	B9	A9	24 V

Reference manuals

CS1W-MAD44: *CS/CJ-series Analog I/O Units Operation Manual* (Cat. No. W345)

CJ1W-AD041-V1/DA041: *CS/CJ-series Analog I/O Units Operation Manual* (Cat. No. W345)

Appendix 6.8. CS1W-PMV01

(1) Selection of a replacement model and notes for replacement

Replacement model	Notes and restrictions
CJ1W-DA041	● Channels are isolated from each other. ● Different in some capabilities. ・ Overall accuracy (25ºC): Voltage output ±0.2% of F.S. ⇒ ±0.3% of F.S. Current output ±0.1% of F.S ⇒ ±0.5% of F.S. ● Different in functions. ・ Answer input, current output disconnection detection, rate-of-change limit, and output high/low limits are not provided. ・ Output hold cannot hold a specified preset value. ● Different in the CIO areas and DM areas.

(2) Differences in functions and capabilities

Item	CS1W-PMV01	CJ1W-DA041	
	Specifications	Difference	Specifications
Number of outputs	4	○	4
Input signal range selection	Selectable for 4 points individually	○	Selectable for 4 points individually
Signal range	1 to 5 V/4 to 20 mA	○	1 to 5 V/4 to 20 mA, 0 to 5 V, 0 to 10 V, -10 to 10 V
Scaling	Not provided	○	Not provided
Accuracy	25ºC Voltage output: ±0.2% of F.S. Current output: ±0.1% of F.S.	△	25ºC Voltage output: ±0.3% of F.S. Current output: ±0.5% of F.S. 0 to 55ºC Voltage output: ±0.5% of F.S. Current output: ±0.8% of F.S.
Temperature coefficient	±0.015% of F.S.		
Resolution	4,000	○	4,000
Warm-up period	10 minutes	○	Not specified
D/A conversion period	100 ms/4 points	◎	1.0 ms max./point
Maximum time to store data in CPU Unit	Conversion period + one CPU Unit cycle	○	Conversion period + one CPU Unit cycle
Allowable load resistance	When 4 to 20 mA: 404 Ω max. (when output range is -20 to 115%) or 458 Ω max. (when output range is -20 to 100%) When 1 to 5 V: 250 kΩ min. (4 to 20 uA)	◎	600 Ω max. (current output) 12 mA (voltage output)
Output impedance	1 to 5 V output: 250 Ω (typical)	◎	Voltage output: 0.5 Ω max. Current output: -
Answer input	The actual analog output values (4 to 20 mA or 1 to 5 V) from the unit's output terminals can be read. Data stored to allocated words of CIO area: 0 to 4000 (0000 to 0FA0 hex) fixed. (When 4 mA or 1 V: 0; when 20 mA or 5 V: 4,000) Accuracy: ±0.2% of F.S. Resolution: 1/2000 Temperature coefficient: ±0.015%/ºC	×	Not provided
Current output disconnection detection	When the actual output of 4 to 20 mA from the Analog Output Unit's output terminals is 0.5 mA or less, it is regarded as an external output circuit current loop disconnection, and the output disconnection flag turns ON.	×	Not provided
Rate-of-change limit	This function can be used to control the speed of up and down changes in analog output values.	×	Not provided
Output high/low limits	This function can be used to place high and low limits on analog output values.	×	Not provided

Item	CS1W-PMV01	CJ1W-DA041	
	Specifications	Difference	Specifications
Output hold	This function holds the analog output value to the previous value or to a specified preset value when any of the following CPU Unit errors occurs, and outputs the analog output value in the CIO Area when the error is cleared. ・ CPU Unit fatal error (including FALS execution) ・ CPU error in CPU Unit ・ CPU Unit's load interrupted	△	Outputs the specified output status (CLR, HOLD, or MAX) under any of the following circumstances. ・ When the output conversion enable bit is OFF. ・ In adjustment mode, when a value other than the output number is output during adjustment. ・ When there is an output setting error or a fatal error occurs at the PLC. ・ When the load is OFF.
Isolation	Transformer and photocoupler isolation between channels and between input terminals and PLC signals	×	Photocoupler isolation between outputs and PLC signals (No insulation between outputs)
Insulation resistance	Between all channels: 20 MΩ (500 VDC with an insulation resistance tester)	×	No isolation between channels
Dielectric strength	Between all channels: 1,000 VAC, 50/60 Hz, 1 min, leakage current 10 mA max.	×	No isolation between channels

Difference: Enhanced (◎), Equivalent (○), Degraded (△), or Incompatible feature (×)

(3) Differences in memory area allocations

■ CIO Areas

Differences in CIO areas

Name		CS1W-PMV01		CJ1W-DA041		Remarks
		Word	Bit	Word	Bit	
Not used		n	00 to 15	n	04 to 15	CJ1W-DA041 uses 00 to 03 for conversion enable.
Analog output value	No. 1	n+1	00 to 15	n+1	00 to 15	
	No. 2	n+2	00 to 15	n+2	00 to 15	
	No. 3	n+3	00 to 15	n+3	00 to 15	
	No. 4	n+4	00 to 15	n+4	00 to 15	
Answer input value	No. 1	n+5	00 to 15	Not provided		CJ1W-DA041 does not provide answer input.
	No. 2	n+6	00 to 15			
	No. 3	n+7	00 to 15			
	No. 4	n+8	00 to 15			
Output disconnection	No. 1	n+9	00	Not provided		CJ1W-DA041 does not provide disconnection detection.
	No. 2		01			
	No. 3		02			
	No. 4		03			

■ DM Areas

・ The area allocations change. If they are programmed, replace them by referring to the manual.

Below are differences in the allocation of similar settings.

Name		CS1W-PMV01		CJ1W-DA041		Remarks
		Word	Bit	Word	Bit	
Output hold value	Output No. 1	m+18		m+2	00 to 07	Only when holding an immediately preceding value. CJ1W-DA041 does not support holding a specified preset output value.
	Output No. 2	m+25		m+3	00 to 07	
	Output No. 3	m+32		m+4	00 to 07	
	Output No. 4	m+39		m+5	00 to 07	

(4) Differences in wiring and terminal arrangement

CS1W-PMV01	CJ1W-DA041
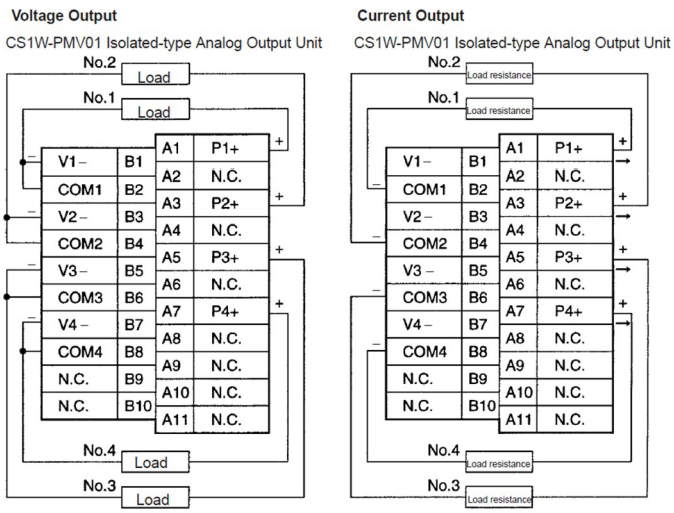	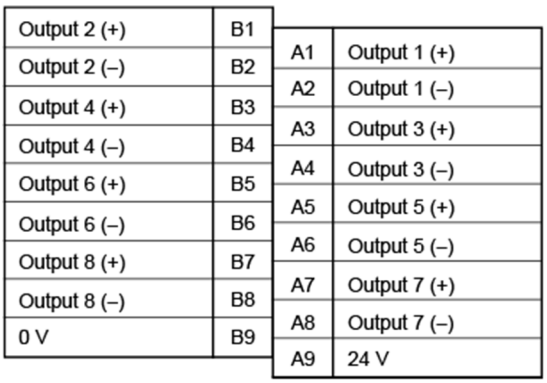

Output 2 (+)	B1
Output 2 (–)	B2
Output 4 (+)	B3
Output 4 (–)	B4
Output 6 (+)	B5
Output 6 (–)	B6
Output 8 (+)	B7
Output 8 (–)	B8
0 V	B9

A1	Output 1 (+)
A2	Output 1 (–)
A3	Output 3 (+)
A4	Output 3 (–)
A5	Output 5 (+)
A6	Output 5 (–)
A7	Output 7 (+)
A8	Output 7 (–)
A9	24 V

Reference manuals

CS1W-PMV01: *CS/CJ-series Analog I/O Units Operation Manual* (Cat. No. W368)

CJ1W-DA041: *CS/CJ-series Analog I/O Units Operation Manual* (Cat. No. W345)

Appendix 6.9. CS1W-PMV02

(1) Selection of a replacement model and notes for replacement

Replacement model	Notes and restrictions
CJ1W-DA041	● Channels are isolated from each other. ● Different in some capabilities. ・ Overall accuracy (25ºC): ±0.1% of F.S. ⇒ ±0.3% of F.S. ● Different in functions. ・ Rate-of-change limit and output high/low limits are not provided. ・ Output hold cannot hold a specified preset value. ● Different in the CIO areas and DM areas.

(2) Differences in functions and capabilities

Item	CS1W-PMV02	CJ1W-DA041	
	Specifications	Difference	Specifications
Number of outputs	4	○	4
Input signal range selection	Selectable for 4 points individually	○	Selectable for 4 points individually
Signal range	0 to 10 V, 0 to 5 V, 0 to 1 V, -10 to 10 V, -5 to 5 V, -1 to 1 V	△	1 to 5 V/4 to 20 mA, 0 to 5 V, 0 to 10 V, -10 to 10 V
Scaling	Provided	×	Not provided
Accuracy	±0.1% of F.S.	△	25ºC Voltage output: ±0.3% of F.S. Current output: ±0.5% of F.S. 0 to 55ºC Voltage output: ±0.5% of F.S. Current output: ±0.8% of F.S.
Temperature coefficient	±0.015%/ºC of F.S.		
Resolution	・-10 to 10 V, -1 to 1 V: 1/16,000 of F.S. ・0 to 10 V, 0 to 1 V, -5 to 5 V: 1/8,000 of F.S. ・0 to 5 V: 1/4,000 of F.S.	○	4,000
Warm-up period	10 minutes	○	Not specified
D/A conversion period	40 ms/4 points	◎	1.0 ms max./point
Maximum output delay time	Output response time (50 ms max.) + conversion period + one CPU Unit cycle	◎	Conversion period + one CPU Unit cycle
Allowable load resistance	10 kΩ min.	◎	12 mA (voltage output)
Output impedance	0.5 Ω max.	○	Voltage output: 0.5 Ω max. Current output: -
Rate-of-change limit	This function can be used to control the speed of up and down changes in analog output values.	×	Not provided
Output high/low limits	This function can be used to place high and low limits on analog output values.	×	Not provided
Output hold	This function holds the analog output value to the previous value or to a specified preset value when any of the following CPU Unit errors occurs. Normal operation is restored when the CPU Unit error is cleared. ・ CPU Unit fatal error (including FALS execution) ・ CPU error in CPU Unit ・ Load on CPU Unit is interrupted	△	Outputs the specified output status (CLR, HOLD, or MAX) under any of the following circumstances. ・ When the output conversion enable bit is OFF. ・ In adjustment mode, when a value other than the output number is output during adjustment. ・ When there is an output setting error or a fatal error occurs at the PLC. ・ When the load is OFF.
Isolation	Transformer and photocoupler isolation between outputs and between output terminals and PLC signals	×	Photocoupler isolation between outputs and PLC signals (No insulation between outputs)
Insulation resistance	Between all outputs: 20 MΩ (500 VDC with an insulation resistance tester)	×	No isolation between channels
Dielectric strength	Between all outputs: 1,000 VAC, 50/60 Hz, 1 min, leakage current 10 mA max.	×	No isolation between channels

Difference: Enhanced (◎), Equivalent (○), Degraded (△), or Incompatible feature (×)

(3) Differences in memory area allocations

■ CIO Areas

Differences in CIO areas

Name		CS1W-PMV02		CJ1W-DA041		Remarks
		Word	Bit	Word	Bit	
Not used		n	00 to 15	n	04 to 15	CJ1W-DA041 uses 00 to 03 for conversion enable.
Analog output value	No. 1	n+1	00 to 15	n+1	00 to 15	
	No. 2	n+2	00 to 15	n+2	00 to 15	
	No. 3	n+3	00 to 15	n+3	00 to 15	
	No. 4	n+4	00 to 15	n+4	00 to 15	

■ DM Areas

・ The area allocations change. If they are programmed, replace them by referring to the manual.

Below are differences in the allocation of similar settings.

Name		CS1W-PMV02		CJ1W-DA041		Remarks
		Word	Bit	Word	Bit	
Output hold value	Output No. 1	m+18		m+2	00 to 07	Only when holding an immediately preceding value. CJ1W-DA041 does not support holding a specified preset output value.
	Output No. 2	m+25		m+3	00 to 07	
	Output No. 3	m+32		m+4	00 to 07	
	Output No. 4	m+39		m+5	00 to 07	
Output type	Output No. 1	m+50		m+1	00 to 01	-10 to 10 V, 0 to 10 V, and 0 to 5 V are compatible. CJ1W-DA041 does not support 0 to 1 V, -5 to 5 V, and -1 to 1 V.
	Output No. 2	m+53			02 to 03	
	Output No. 3	m+56			04 to 05	
	Output No. 4	m+59			06 to 07	

(4) Differences in wiring and terminal arrangement

CS1W-PMV02	CJ1W-DA041
CS1W-PMV02 Isolated-type Analog Output Unit 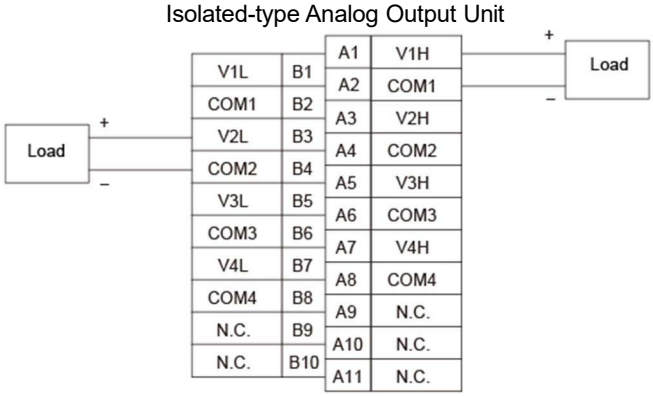 B terminals: 0 to 1 V, ±1 V; A terminals: 0 to 10 V, 0 to 5 V, ±10 V, ±5 V	Voltage output 2 (+) B1 Output 2 (–) B2 Current output 2 (+) B3 Voltage output 4 (+) B4 Output 4 (–) B5 Current output 4 (+) B6 N.C. B7 N.C. B8 0 V B9 A1 Voltage output 1 (+) A2 Output 1 (–) A3 Current output 1 (+) A4 Voltage output 3 (+) A5 Output 3 (–) A6 Current output 3 (+) A7 N.C. A8 N.C. A9 24 V

Reference manuals

CS1W-PMV02: *CS/CJ-series Analog I/O Units Operation Manual* (Cat. No. W368)

CJ1W-DA041: *CS/CJ-series Analog I/O Units Operation Manual* (Cat. No. W345)

Appendix 6.10. CS1W-PTS51

(1) Selection of a replacement model and notes for replacement

Replacement model	Notes and restrictions
CJ1W-PTS51	● The temperature sensor type setting changes from selectable per point to common for all points. ● Different in the DM areas. ● The CIO areas remain the same. ● Different in the terminal block, terminal arrangement, and wiring.

(2) Differences in functions and capabilities

Item		CS1W-PTS51	CJ1W-PTS51	
		Specifications	Difference	Specifications
Number of inputs		4	○	4
Temperature sensor type		Selectable per point from K, J, L, R, S, T, and B	△	Selectable from K, J, L, R, S, T, and B (common for all points)
Data storage in the CIO area		The actual process data in the input range is stored in four digits hexadecimal (binary or BCD values) in the allocated words in the CIO area.	○	The actual process data in the input range is stored in four digits hexadecimal (binary or BCD values) in the allocated words in the CIO area.
Accuracy (25ºC)		・ With Celsius selected: ±0.3% of PV or ±1ºC, whichever is greater, ±1 digit max. ・ With Fahrenheit selected: ±0.3% of PV or ±2ºF, whichever is greater, ±1 digit max. ・ However, the accuracy of K and T at -100ºC or lower and L is ±2ºC ±1 digit max. The accuracy of R and S at 200ºC or lower is ±3ºC ±1 digit max. The accuracy of B at 400ºC or lower is not specified. ・ PV: Process value data	○	・ With Celsius selected: ±0.3% of PV or ±1ºC, whichever is greater, ±1 digit max. ・ With fahrenheit selected: ±0.3% of PV or ±2ºF, whichever is greater, ±1 digit max. ・ However, the accuracy of K and T at -100ºC or lower and L is ±2ºC ±1 digit max. The accuracy of R and S at 200ºC or lower is ±3ºC ±1 digit max. The accuracy of B at 400ºC or lower is not specified. ・ PV: Process value data
Temperature characteristics		Refer to *(2)-2 Temperature characteristics according to thermocouple type*.	○	Refer to *(2)-2 Temperature characteristics according to thermocouple type*.
Warm-up period		30 minutes	○	30 minutes
Conversion period		250 ms/4 points	○	250 ms/4 points
Maximum time to store data in CPU Unit		Conversion period + one CPU Unit cycle	○	Conversion period + one CPU Unit cycle
Sensor error detection		・ Detects sensor error at each input and turns ON the sensor error flag. ・ The process value overrange direction for when a sensor error occurs can be specified. (High: Set input range + 20 digits; Low: Set input range - 20 digits)	○	・ Detects sensor error at each input and turns ON the sensor error flag. ・ The process value overrange direction for when a sensor error occurs can be specified. (High: Set input range + 20 digits; Low: Set input range - 20 digits)
Functions	Process value alarm	Process value 2-point alarm (L, H), alarm hysteresis, and ON-delay timer (0 to 60 s) are available. External alarm outputs: One per input (H or L).	○	Process value 2-point alarm (L, H), alarm hysteresis, and ON-delay timer (0 to 60 s) are available. External alarm outputs: One per input (H or L).
	External alarm output	NPN output (with short-circuit protection) ・ External power supply voltage: 20.4 to 26.4 VDC ・ Max. switching capacity: 100 mA (for one output) ・ Leakage current: 0.3 mA max. ・ Residual voltage: 3 V max.	○	NPN output (with short-circuit protection) ・ External power supply voltage: 20.4 to 26.4 VDC ・ Max. switching capacity: 100 mA (for one output) ・ Leakage current: 0.3 mA max. ・ Residual voltage: 3 V max.
Isolation		・ Between inputs and PLC signals: Transformer for power supply and photocoupler for signals ・ Between inputs: Transformer for power supply and photocoupler for signals	○	・ Between inputs and PLC signals: Transformer for power supply and photocoupler for signals ・ Between inputs: Transformer for power supply and photocoupler for signals

Item	CS1W-PTS51	CJ1W-PTS51	
	Specifications	Difference	Specifications
Insulation resistance	20 MΩ min. (500 VDC with an insulation resistance tester) ・ Between all output and NC terminals and external AC terminals (Power Supply Unit) ・ Between all input terminals and external AC terminals (Power Supply Unit) ・ Between all input terminals and all output terminals ・ Between all external DC terminals (input, output, and NC terminals) and FG plate ・ Between all input and output terminals and all NC terminals	○	20 MΩ min. (500 VDC with an insulation resistance tester) ・ Between all output and NC terminals and external AC terminals (Power Supply Unit) ・ Between all input terminals and external AC terminals (Power Supply Unit) ・ Between all input terminals and all output terminals ・ Between all external DC terminals (input, output, and NC terminals) and FG plate ・ Between all input and output terminals and all NC terminals
Dielectric strength	・ Between all output and NC terminals and external AC terminals (Power Supply Unit) ・ 2,000 VAC, 50/60 Hz 1 min., detection current: 1 mA ・ Between all input terminals and external AC terminals (Power Supply Unit) ・ Between all input terminals and all output terminals ・ Between all external DC terminals (input, output, and NC terminals) and FG plate 1,000 VAC, 50/60 Hz 1 min., detection current: 1 mA ・ Between all channels 500 VAC, 50/60 Hz 1 min., detection current: 1 mA	○	・ Between all output and NC terminals and external AC terminals (Power Supply Unit) 2,000 VAC, 50/60 Hz 1 min., detection current: 1 mA ・ Between all input terminals and external AC terminals (Power Supply Unit) ・ Between all input terminals and all output terminals ・ Between all external DC terminals (input, output, and NC terminals) and FG plate 1,000 VAC, 50/60 Hz 1 min., detection current: 1 mA ・ Between all channels 500 VAC, 50/60 Hz 1 min., detection current: 1 mA

Difference: Enhanced (◎), Equivalent (○), Degraded (△), or Incompatible feature (×)

(2)-1 Sensor types and input ranges

No difference

(2)-2 Temperature characteristics according to thermocouple type

Thermocouple type	Temperature range	Set value error when ambient temperature changes by 1ºC
R	0 to 200ºC	±0.43ºC
	200 to 1,000ºC	±0.29ºC
	1000 to 1,700ºC	±285 ppm of PV
S	0 to 200ºC	±0.43ºC
	200 to 1,000ºC	±0.29ºC
	1000 to 1,700ºC	285 ppm of PV
B	400ºC max.	Not guaranteed
	400 to 800ºC	±0.43ºC
	800 to 1,000ºC	±0.29ºC
	1000 to 1,800ºC	285 ppm of PV
K	-200 to -100ºC	±0.29ºC
	-100 to 400ºC	±0.11ºC
	400 to 1,300ºC	±285 ppm of PV
J	-100 to 400ºC	±0.11ºC
	400 to 850ºC	±285 ppm of PV
T	-200 to -100ºC	±0.29ºC
	-100 to 400ºC	±0.11ºC
L	-100 to 400ºC	±0.11ºC
	400 to 850ºC	±285 ppm of PV

(3) Differences in memory area allocations

■ DM Areas

・ The area allocations change. If they are programmed, replace them by referring to the manual.
Below are the major differences.

<CS1W-PTS51>

DM area address				Data range		Default	Data content
Input No. 1	Input No. 2	Input No. 3	Input No. 4	Decimal	Hexadecimal		
m+19	m+23	m+27	m+31	0 to 9	0000 to 0009 hex	0	● Input type setting 0: K, 1: K (with decimal point), 2: J, 3: J (with decimal point), 4: T, 5: L, 6: L (with decimal point), 7: R, 8: S, 9: B

<CJ1W-PTS51>

DM area address				Data range		Default	Data content
Input No. 1	Input No. 2	Input No. 3	Input No. 4	Decimal	Hexadecimal		
m+19				0 to 9	0000 to 0009 hex	0	● Input type setting 0: K, 1: K (with decimal point), 2: J, 3: J (with decimal point), 4: T, 5: L, 6: L (with decimal point), 7: R, 8: S, 9: B

■ CIO Areas

The CIO areas remain the same.

(4) Differences in wiring and terminal arrangement

CS1W-PTS51	CJ1W-PTS51
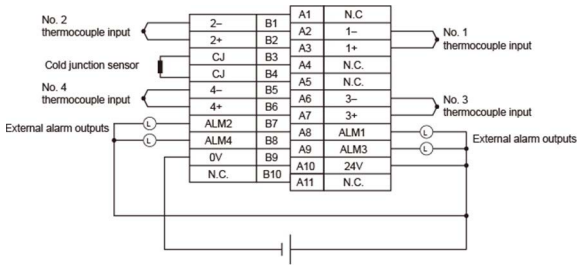	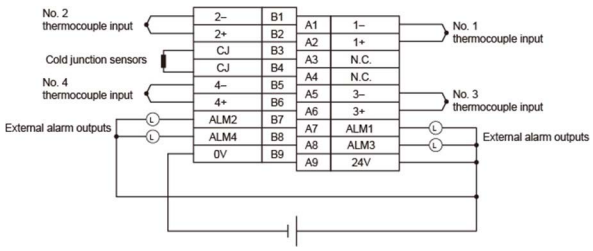

Reference manuals

CS1W-PTS51: *CS/CJ-series Analog I/O Units Operation Manual* (Cat. No. W368)

CJ1W-PTS51: *CS/CJ-series Analog I/O Units Operation Manual* (Cat. No. W368)

Appendix 6.11. CS1W-PTS55

(1) Selection of a replacement model and notes for replacement

Replacement model	Notes and restrictions
CJ1W-PTS51	● The number of input points changes from 8 to 4. ● Accordingly, the number of Units changes from 1 to 2. ● A Unit number will be allocated to the increased Unit, which will have a memory area address corresponding to the allocated Unit number. ● The temperature sensor type setting changes from selectable per point to common for all points. ● External alarm output will be provided. ● Different in the DM areas. ● Expansion setting area allocations for process value alarms are not supported. ● Different in the CIO areas. ● Different in the terminal block, terminal arrangement, and wiring.

(2) Differences in functions and capabilities

Item		CS1W-PTS55	CJ1W-PTS51	
		Specifications	Difference	Specifications
Number of inputs		8	×	4
Temperature sensor type		Selectable per point from K, J, L, R, S, T, and B (can be set to Not used)	△	Selectable from K, J, L, R, S, T, and B (common for all points)
Data storage in the CIO area		The actual process data in the input range is stored in four digits hexadecimal (binary or BCD values) in the allocated words in the CIO area.	○	The actual process data in the input range is stored in four digits hexadecimal (binary or BCD values) in the allocated words in the CIO area.
Accuracy (25ºC)		・ With Celsius selected: ±0.3% of PV or ±1ºC, whichever is greater, ±1 digit max. ・ With fahrenheit selected: ±0.3% of PV or ±2ºF, whichever is greater, ±1 digit max. ・ However, the accuracy of K and T at -100ºC or lower and L is ±2ºC ±1 digit max. The accuracy of R and S at 200ºC or lower is ±3ºC ±1 digit max. The accuracy of B at 400ºC or lower is not specified. ・ PV: Process value data	○	・ With Celsius selected: ±0.3% of PV or ±1ºC, whichever is greater, ±1 digit max. ・ With Fahrenheit selected: ±0.3% of PV or ±2ºF, whichever is greater, ±1 digit max. ・ However, the accuracy of K and T at -100ºC or lower and L is ±2ºC ±1 digit max. The accuracy of R and S at 200ºC or lower is ±3ºC ±1 digit max. The accuracy of B at 400ºC or lower is not specified. ・ PV: Process value data
Temperature characteristics		Refer to *(2)-2 Temperature characteristics according to thermocouple type*.	○	Refer to *(2)-2 Temperature characteristics according to thermocouple type*.
Warm-up period		30 minutes	○	30 minutes
Conversion period		250 ms/8 points	△	250 ms/4 points
Maximum time to store data in CPU Unit		Conversion period + one CPU Unit cycle	○	Conversion period + one CPU Unit cycle
Sensor error detection		・ Detects sensor error at each input and turns ON the sensor error flag. ・ The process value overrange direction for when a sensor error occurs can be specified. (High: Set input range + 20 digits; Low: Set input range - 20 digits)	○	・ Detects sensor error at each input and turns ON the sensor error flag. ・ The process value overrange direction for when a sensor error occurs can be specified. (High: Set input range + 20 digits; Low: Set input range - 20 digits)
Functions	Process value alarm	Process value 2-point alarm (L, H), alarm hysteresis, and ON-delay timer (0 to 60 s) are available. Two alarms per input (L, H) can be output to addresses in the CIO Area specified in the expansion setting area.	△	Process value 2-point alarm (L, H), alarm hysteresis, and ON-delay timer (0 to 60 s) are available. External alarm outputs: One per input (H or L).
	External alarm output	-	◎	NPN output (with short-circuit protection) ・ External power supply voltage: 20.4 to 26.4 VDC ・ Max. switching capacity: 100 mA (for one output) ・ Leakage current: 0.3 mA max. ・ Residual voltage: 3 V max.

Item	CS1W-PTS55	CJ1W-PTS51	
	Specifications	Difference	Specifications
Isolation	・ Between inputs and PLC signals: Transformer for power supply and photocoupler for signals ・ Between inputs: Transformer for power supply and photocoupler for signals	○	・ Between inputs and PLC signals: Transformer for power supply and photocoupler for signals ・ Between inputs: Transformer for power supply and photocoupler for signals
Insulation resistance	20 MΩ min. (500 VDC with an insulation resistance tester) ・ Between all input terminals and external AC terminals (Power Supply Unit) ・ Between all external DC terminals (input and NC terminals) and FG plate ・ Between all input terminals and all NC terminals	◎	20 MΩ min. (500 VDC with an insulation resistance tester) ・ Between all output and NC terminals and external AC terminals (Power Supply Unit) ・ Between all input terminals and external AC terminals (Power Supply Unit) ・ Between all input terminals and all output terminals ・ Between all external DC terminals (input, output, and NC terminals) and FG plate ・ Between all input and output terminals and all NC terminals
Dielectric strength	・ Between all NC terminals and external AC terminals (Power Supply Unit) 2,000 VAC, 50/60 Hz 1 min., detection current: 1 mA ・ Between all input terminals and external AC terminals (Power Supply Unit) ・ Between all external DC terminals (input and NC terminals) and FG plate 1,000 VAC, 50/60 Hz 1 min., detection current: 1 mA ・ Between all channels 500 VAC, 50/60 Hz 1 min., detection current: 1 mA	◎	・ Between all output and NC terminals and external AC terminals (Power Supply Unit) 2,000 VAC, 50/60 Hz 1 min., detection current: 1 mA ・ Between all input terminals and external AC terminals (Power Supply Unit) ・ Between all input terminals and all output terminals ・ Between all external DC terminals (input, output, and NC terminals) and FG plate 1,000 VAC, 50/60 Hz 1 min., detection current: 1 mA ・ Between all channels 500 VAC, 50/60 Hz 1 min., detection current: 1 mA

Difference: Enhanced (◎), Equivalent (○), Degraded (△), or Incompatible feature (×)

(2)-2 Temperature characteristics according to thermocouple type

Thermocouple type	Temperature range	Set value error when ambient temperature changes by 1ºC
R	0 to 200ºC	±0.43ºC
	200 to 1,000ºC	±0.29ºC
	1,000 to 1,700ºC	±285 ppm of PV
S	0 to 200ºC	±0.43ºC
	200 to 1,000ºC	±0.29ºC
	1,000 to 1,700ºC	285 ppm of PV
B	400ºC max.	Not guaranteed
	400 to 800ºC	±0.43ºC
	800 to 1,000ºC	±0.29ºC
	1,000 to 1,800ºC	285 ppm of PV
K	-200 to -100ºC	±0.29ºC
	-100 to 400ºC	±0.11ºC
	400 to 1,300ºC	±285 ppm of PV
J	-100 to 400ºC	±0.11ºC
	400 to 850ºC	±285 ppm of PV
T	-200 to -100ºC	±0.29ºC
	-100 to 400ºC	±0.11ºC
L	-100 to 400ºC	±0.11ºC
	400 to 850ºC	±285 ppm of PV

(2)-1 Sensor types and input ranges

No difference

(3) Differences in memory area allocations

■ DM Areas

・ The area allocations change. If they are programmed, replace them by referring to the manual.
Below are the major differences.

<CS1W-PTS55>

DM area address								Data range		Default	Data content
Input No. 1	Input No. 2	Input No. 3	Input No. 4	Input No. 5	Input No. 6	Input No. 7	Input No. 8	Decimal	Hexadecimal		
m+1								0 to 59	0000 to 003B hex	0 (0000 hex)	● Display parameter Data range error address
m+4	m+8	m+12	m+16	m+20	m+24	m+28	m+32	0 to 32000	0000 to 7D00 hex	10000 (2710 hex)	● Span adjustment value Set value x 0.0001
m+34								Section (3)-1	Section (3)-1	0 (0000 hex)	● Operation settings 00: Temperature unit setting (ºC or ºF) 01: Data unit setting 04: Data format (BIN or BCD) 08: Minus sign display format for BCD display 12: Data direction at sensor error
m+35	m+38	m+41	m+44	m+47	m+50	m+53	m+56	0 to 9, 15	0000 to 0009 hex 000F hex	0	● Input type setting 0: K, 1: K (with decimal point), 2: J, 3: J (with decimal point), 4: T, 5: L, 6: L (with decimal point), 7: R, 8: S, 9: B, F: Not used
-	-	-	-	-	-	-	-	-	-	-	● External alarm output mode
-	-	-	-	-	-	-	-	-	-	-	● Span adjustment mode
m+59								0, 1	0000, 0001 hex	0 (0000 hex)	● Expansion setting area enable 0: Disabled 1: Enabled
m+60								0 to 6143	0000 to 17FF hex	0 (0000 hex)	● Expansion setting area address CIO area (fixed). Number of words

<CJ1W-PTS51>

DM area address				Data range		Default	Data content
Input No. 1	Input No. 2	Input No. 3	Input No. 4	Decimal	Hexadecimal		
m+1				0 to 34	0000 to 0022 hex	0 (0000 hex)	● Display parameter Data range error address
m+4	m+8	m+12	m+16	0 to 9999	0000 to 270F hex	1000 (03EB hex)	● Span adjustment value m+32 contains 0: Set value x 0.001
				0 to 32000	0000 to 7D00 hex	10000 (2710 hex)	m+32 contains 1: Set value x 0.0001
m+18				Section (3)-1	Section (3)-1	0 (0000 hex)	● Operation settings 00 to 03: Temperature unit setting (ºC or ºF) 04 to 07: Data format (BIN or BCD) 08 to 11: Minus sign display format for BCD display 12 to 15: Data direction at sensor error
m+19				0 to 9	0000 to 0009 hex	0	● Input type setting 0: K, 1: K (with decimal point), 2: J, 3: J (with decimal point), 4: T, 5: L, 6: L (with decimal point), 7: R, 8: S, 9: B
m+20	m+23	m+26	m+29	0, 1	0000, 0001 hex	0 (0000 hex)	● External alarm output mode Select either high limit or low limit alarm output. 0: High limit alarm; 1: Low limit alarm
m+32				0, 1	0000, 0001 hex	1	● Span adjustment mode 0: 1/1000 1: 1/10000
-				-	-	-	● Expansion setting area enable
-				-	-	-	● Expansion setting area address

(3)-1 Operation settings

CS1W-PTS55					CJ1W-PTS51			
Word	Bit	Description	Setting	Difference	Word	Bit	Description	Setting
m+34	00	Temperature unit setting	0: ºC 1: ºF	○	m+18	00	Temperature unit setting	0: ºC 1: ºF
	01	Data unit setting	0: Follow the input type setting 1: Use units of 0.1ºC or 0.1ºF as the temperature data format. (Only binary is supported.)	×		-	-	-
	04	Data format	0: BIN (Negative values are given as 2's complements). 1: BCD	○		04	Data format	0: BIN (Negative values are given as 2's complements). 1: BCD
	08	Minus sign display format for BCD display	0: "F" is used to indicate the minus sign. 1: The leftmost bit is used to indicate the minus sign. The setting is disabled if bits 04 to 07 are set to 0.	○		08	Minus sign display format for BCD display	0: "F" is used to indicate the minus sign. 1: The leftmost bit is used to indicate the minus sign. The setting is disabled if bits 04 to 07 are set to 0.
	12	Data direction at sensor error	0: Goes to upper limit at sensor error. 1: Goes to lower limit at sensor error.	○		12	Data direction at sensor error	0: Goes to upper limit at sensor error. 1: Goes to lower limit at sensor error.

Difference: Enhanced (◎), Equivalent (○), Degraded (△), or Incompatible feature (×)

■ Expansion Setting Areas

<CS1W-PTS55 only>

* CJ1W-PTS51 does not support specifying an expansion setting area.

First word: word o. (o = address specified in word m+60 in the DM area)

Direction: This Unit → CPU Unit

Word	Bit	CS1W-PTS55			
		Name		Data range	Description
o	00	Input No. 1	Process value L (low limit) alarm	0, 1	0: Process value > Set value 1: Process value ≤ Set value
	01		Process value H (high limit) alarm	0, 1	0: Process value < Set value 1: Process value ≥ Set value
	02	Input No. 2	Process value L (low limit) alarm	0, 1	Same as for input No. 1.
	03		Process value H (high limit) alarm		
	04	Input No. 3	Process value L (low limit) alarm		
	05		Process value H (high limit) alarm		
	06	Input No. 4	Process value L (low limit) alarm		
	07		Process value H (high limit) alarm		
	08	Input No. 5	Process value L (low limit) alarm		
	09		Process value H (high limit) alarm		
	10	Input No. 6	Process value L (low limit) alarm		
	11		Process value H (high limit) alarm		
	12	Input No. 7	Process value L (low limit) alarm		
	13		Process value H (high limit) alarm		
	14	Input No. 8	Process value L (low limit) alarm		
	15		Process value H (high limit) alarm		

■ CIO Areas

Direction: This Unit → CPU Unit

Word	Bit	CS1W-PTS55				CJ1W-PTS51				
		Name		Data range	Description	Difference	Name		Data range	Description
n	00	Input No. 1	Process value L (low limit) alarm	0, 1	0: Process value > Set value 1: Process value ≤ Set value	○	Input No. 1	Process value L (low limit) alarm	0, 1	0: Process value > Set value 1: Process value ≤ Set value
	01		Process value H (high limit) alarm	0, 1	0: Process value < Set value 1: Process value ≥ Set value			Process value H (high limit) alarm	0, 1	0: Process value < Set value 1: Process value ≥ Set value
	02	Input No. 2	Process value L (low limit) alarm	0, 1	Same as for input No. 1.	○	Input No. 2	Process value L (low limit) alarm	0, 1	Same as for input No. 1.
	03		Process value H (high limit) alarm					Process value H (high limit) alarm		
	04	Input No. 3	Process value L (low limit) alarm			○	Input No. 3	Process value L (low limit) alarm		
	05		Process value H (high limit) alarm					Process value H (high limit) alarm		
	06	Input No. 4	Process value L (low limit) alarm			○	Input No. 4	Process value L (low limit) alarm		
	07		Process value H (high limit) alarm					Process value H (high limit) alarm		
	08	Input No. 5	Process value L (low limit) alarm			×	Not used		0	---
	09		Process value H (high limit) alarm							
	10	Input No. 6	Process value L (low limit) alarm							
	11		Process value H (high limit) alarm							
	12	Input No. 7	Process value L (low limit) alarm							
	13		Process value H (high limit) alarm							
	14	Input No. 8	Process value L (low limit) alarm							
	15		Process value H (high limit) alarm							

Word	Bit	CS1W-PTS55				CJ1W-PTS51				
		Name		Data range	Description	Difference	Name		Data range	Description
n+1	00 to 15	Input No. 1	Process value	Depends on type of input.	Stores data in the data range specified for the input type ±20 digits.	○	Input No. 1	Process value	Depends on type of input.	Stores data in the data range specified for the input type ±20 digits.
n+2	00 to 15	Input No. 2				○	Input No. 2			
n+3	00 to 15	Input No. 3				○	Input No. 3			
n+4	00 to 15	Input No. 4				○	Input No. 4			
n+5	00 to 15	Input No. 5				×	Not used		0000	---
n+6	00 to 15	Input No. 6								
n+7	00 to 15	Input No. 7								
n+8	00 to 15	Input No. 8								
n+9	00	Input No. 1	Input error	0, 1	0: Normal 1: Error	○	Input No. 1	Sensor error	0, 1	0: Normal 1: Error
	01	Input No. 2				○	Input No. 2	Sensor error	0, 1	
	02	Input No. 3				○	Input No. 3	Sensor error	0, 1	
	03	Input No. 4				○	Input No. 4	Sensor error	0, 1	
	04	Input No. 5				×	Not used		0	---
	05	Input No. 6								
	06	Input No. 7								
	07	Input No. 8								
	08	Cold junction sensor 1 error		0, 1	0: Normal 1: Error	○	Cold junction sensor error		0, 1	0: Normal 1: Error
	09	Cold junction sensor 2 error		0, 1		×	Not used		0	---
	10 to 14	Not used		0	---	○	Not used		0	---
	15	Conversion data enabled flag		0, 1	0: Data disabled 1: Data enabled		Conversion data enabled flag		0, 1	0: Data disabled 1: Data enabled

Difference: Enhanced (◎), Equivalent (○), Degraded (△), or Incompatible feature (×)

(4) Differences in wiring and terminal arrangement

CS1W-PTS55	CJ1W-PTS51
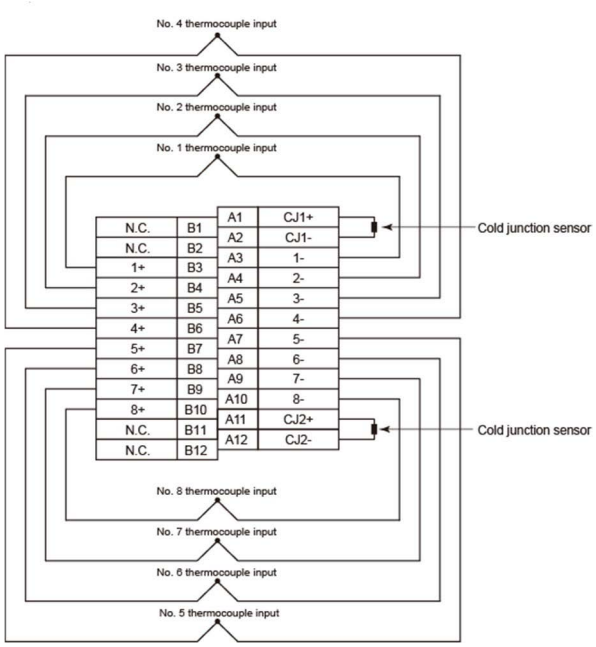	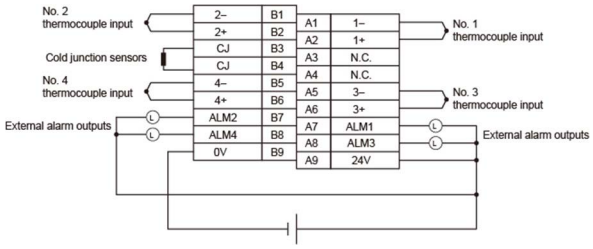

Reference manuals

CS1W-PTS55: *CS/CJ-series Analog I/O Units Operation Manual* (Cat. No. W368)

CJ1W-PTS51: *CS/CJ-series Analog I/O Units Operation Manual* (Cat. No. W368)

Appendix 6.12. CS1W-PTS01-V1

(1) Selection of a replacement model and notes for replacement

Replacement model	Notes and restrictions
CJ1W-PTS15	● The number of input points changes from 4 to 2. ● Accordingly, the number of Units changes from 1 to 2. ● A Unit number will be allocated to the increased Unit, which will have a memory area address corresponding to the allocated Unit number. ● An external power supply (24 VDC) is necessary. ● The input range cannot be specified by setting an internal range (within a measurable input range). ● Different in the DM areas. ● Additional expansion setting areas will be provided. ● Different in the CIO areas. ● Additional expansion control/monitor areas will be provided. ● Different in the terminal block, terminal arrangement, and wiring.

(2) Differences in functions and capabilities

Item	CS1W-PTS01-V1	CJ1W-PTS15	
	Specifications	Difference	Specifications
Number of inputs	4	×	2
Temperature sensor type	・ Thermocouple B, E, J, K, N, R, S, T or -80 to 80 mV. (Set separately for each of four inputs.) ・ Sensor type, input range, and scaling to industrial units are separate for each of the 4 inputs. ・ Note: Sensor type, input range, and scaling to industrial units are set in the DM Area.	◎	・ Selectable from B, E, J, K, L, N, R, S, T, U, WRe5-26, PL II, and mV. ・ The sensor type, input range, and scaling can be set individually for each of 2 inputs.
Input range	・ The input range can be set within any of the measurable input ranges shown in (2)-1-1 (variable input range). ・ Note: Internally, inputs are processed in five ranges (refer to (2)-1-2), so accuracy and resolution accord with these internal ranges.	×	-
Scaling	・ Data to be stored in the allocated words in the CIO area must be scaled (with the minimum and maximum values set by user) (4 inputs set separately). ・ For example, data can be stored at 0% to 100%.	○	・ Data to be stored in the allocated words in the CIO area must be scaled (with the minimum and maximum values set by user) (2 inputs set separately). ・ For example, data can be converted at 0% to 100%.
Data storage in the CIO area	・ The value derived from carrying out the following processing in order on the actual process data in the input range is stored in four digits hexadecimal (binary values) in the allocated words in the CIO Area. ・ 1) Mean value processing → 2) Scaling → 3) Zero/span adjustment → 4) Output limits	○	The value derived from carrying out the following processing in order on the actual process data in the input range is stored in four digits hexadecimal (binary values) in the allocated words. ・ 1) Mean value processing → 2) Scaling → 3) Zero/span adjustment → 4) Output limits
Accuracy (25ºC)	・ ±0.1% (of internal range full span) ・ As shown in the following equation, the accuracy depends on the ratio of the selected internal range (0 to 4) span to the set input range span. Accuracy = ±0.1% x Internal range span (electromotive force conversion) / Set input range span (electromotive force conversion)	◎	±0.05% (Depends on the sensor used and the measured temperature. Refer to *Accuracy by Sensor Type and Measured Temperature Range* on page 3-16 for details.)
Temperature coefficient	±0.015%/ºC, for any of internal range numbers 0 to 4.	◎	±0.01%/ºC (for full scale of electromotive force)
Resolution	・ 1/4096 (of internal range full span) As shown in the following equation, the accuracy depends on the ratio of the selected internal range (0 to 4) span to the set input range span. ・ Resolution = [1/4096] x [Internal range span (electromotive force conversion)] / [Set input range span (electromotive force conversion)]	◎	1/64000

Item		CS1W-PTS01-V1	CJ1W-PTS15	
		Specifications	Difference	Specifications
Cold junction compensation error		±1ºC, at 20±10ºC	○	±1ºC, at 20±10ºC
Warm-up period		45 minutes	○	45 minutes
Maximum signal input		-80 to 80 mV	◎	±120 mV
Input impedance		20 kΩ min.	○	20 kΩ min.
Input disconnection detection current		0.1μA (typical)	○	0.1μA (typical)
Response time		1 s (travel time from input 0% to 90%, for step input)	◎	100 ms (travel time from input 0% to 90%, for ±100 mV step input and with moving average for 4 samples)
Conversion period		150 ms/4 inputs	◎	10 ms/2 inputs
Maximum time to store data in CPU Unit		Conversion period + one CPU Unit cycle	○	Conversion period + one CPU Unit cycle
Disconnection detection		・ Detects disconnections at each input and turns ON the disconnection detection flag. ・ Burnout detection time: Approx. 5 s max. ・ The process value overrange direction for when a disconnection occurs can be specified. (High: +115% of set input range; low: -15% of set input range)	◎	・ Detects disconnections at each input and turns ON the disconnection detection flag. ・ Burnout detection time: Approx. 0.5 s max. ・ The process value overrange direction for when a disconnection occurs can be specified. (High: 115% of set input range; low: -15% of set input range)
Functions	Mean value processing (input filter)	Calculates the moving average for the specified number of process values (1 to 16), and stores that value in the CIO Area as the process value.	○	Calculates the moving average for the specified number of process values (1 to 128), and stores that value in the CIO Area as the process value.
	Process value alarm	Process value 4-point alarm (HH, H, L, LL), alarm hysteresis, and ON-delay timer (0 to 60 s) are available.	○	Process value 4-point alarm (LL, L, H, HH), alarm hysteresis, and ON-delay timer (0 to 60 s) are available.
	Rate-of-change calculation	Calculates the amount of change per comparison time interval (1 to 16 s).	○	Calculates the amount of change per comparison time interval (1 to 16 s).
	Rate-of-change alarm	Rate-of-change 2-point alarm (H, L), alarm hysteresis (shared with process value alarm), and ON-delay timer (0 to 60 s, shared with process value alarm) are available.	○	・ Rate-of-change 2-point alarm (L, H), alarm hysteresis, and ON-delay timer (0 to 60 s) are available. (Shared with process value alarm)
	Adjustment period control	-	◎	When zero/span adjustment is executed, the date is internally recorded at the Unit. When the preset zero/span adjustment period and number of days notice have elapsed (allocated in expansion setting area), this function turns ON a warning flag to give notice that it is time for readjustment.
	Peak and bottom detection	-	◎	This function detects the maximum (peak) and minimum (bottom) analog input values, from when the hold start bit (output) allocated to the expansion control/monitor area turns ON until it turns OFF, and stores them in the expansion control/monitor area.
	Top and valley detection	-	◎	This function detects the top and valley values for analog inputs, from when the hold start bit (output) allocated to the expansion control/monitor area turns ON until it turns OFF, and stores them in the expansion control/monitor area.

Item	CS1W-PTS01-V1	CJ1W-PTS15	
	Specifications	Difference	Specifications
Isolation	Transformer isolation between channels and between input terminals and PLC signals	△	・ Between inputs and PLC signals: Transformer for power supply and photocoupler for signals Between inputs: Transformer for power supply and photocoupler for signals Cold junction compensation circuit: No isolation from input 2
Insulation resistance	Between all channels: 20 MΩ (500 VDC with an insulation resistance tester)	○	Between all channels: 20 MΩ (500 VDC with an insulation resistance tester)
Dielectric strength	Between all channels: 1,000 VAC, 50/60 Hz, 1 min, leakage current 10 mA max.	○	Between all channels: 1,000 VAC, 50/60 Hz, 1 min, leakage current 10 mA max.
External power supply	-	×	24 VDC +10%/-15% 60 mA max., inrush current: 20 A for 1 ms max. (The external 24-VDC power supply must be isolated.)

Difference: Enhanced (◎), Equivalent (○), Degraded (△), or Incompatible feature (×)

(2)-1 Sensor types and input ranges

(2)-1-1 Measurable input ranges

Sensor type	CS1W-PTS01-V1		CJ1W-PTS15		
	DM area setting	Measurable input range	Difference	DM area setting	Measurable input range
B	0	0 to 1,820ºC	○	0	0 to 1,820ºC
E	1	-270 to 1,000ºC	○	1	-270 to 1,000ºC
J	2	-210 to 1,200ºC	○	2	-210 to 1,200ºC
K	3	-270 to 1,372ºC	○	3	-270 to 1,372ºC
N	4	-270 to 1,300ºC	○	4	-270 to 1,300ºC
R	5	-50 to 1,768ºC	○	5	-50 to 1,768ºC
S	6	-50 to 1,768ºC	○	6	-50 to 1,768ºC
T	7	-270 to 400ºC	○	7	-270 to 400ºC
mV	8	-80 to 80 mV	△	8	-100 to 100 mV
L	-	-	◎	9	-200 to 900ºC
U	-	-	◎	10	-200 to 600ºC
WRe5-26	-	-	◎	11	0 to 2,300ºC
PL II	-	-	◎	12	0 to 1,300ºC

Difference: Enhanced (◎), Equivalent (○), Degraded (△), or Incompatible feature (×)

(2)-1-2 Internal ranges

<CS1W-PTS01-V1 only>

* CJ1W-PTS15 does not support specifying an internal range.

Internal range number	Thermocouple electromotive force	Internal range span
0	-80 to 80 mV	160 mV
1	-40 to 40 mV	80 mV
2	-20 to 20 mV	40 mV
3	-10 to 10 mV	20 mV
4	-5 to 5 mV	10 mV

(2)-1-3 Set input ranges corresponding to internal ranges

<CS1W-PTS01-V1 only>

* CJ1W-PTS15 does not support specifying an internal range.

Sensor type	Measurable input range	Internal range No. 0	Internal range No. 1	Internal range No. 2	Internal range No. 3	Internal range No. 4
		-80 to 80 mV	-40 to 40 mV	-20 to 20 mV	-10 to 10 mV	-5 to 5 mV
B	0 to 1,820ºC	Not used	Not used	0 to 1,820ºC	0 to 1,496ºC	0 to 1,030ºC
E	-270 to 1,000ºC	-270 to 1,000ºC	-270 to 537ºC	-270 to 286ºC	-270 to 153ºC	-94 to 80ºC
J	-210 to 1,200ºC	-210 to 1,200ºC	-210 to 713ºC	-210 to 366ºC	-210 to 186ºC	-100 to 95ºC
K	-270 to 1,372ºC	-270 to 1,372ºC	-270 to 967ºC	-270 to 484ºC	-270 to 246ºC	-153 to 121ºC
N	-270 to 1,300ºC	-270 to 1,300ºC	-270 to 1,097ºC	-270 to 584ºC	-270 to 318ºC	-270 to 171ºC
R	-50 to 1,768ºC	Not used	-50 to 1,769ºC	-50 to 1,684ºC	-50 to 961ºC	-50 to 548ºC
S	-50 to 1,768ºC	Not used	Not used	-50 to 1,769ºC	-50 to 1,035ºC	-50 to 576ºC
T	-270 to 400ºC	Not used	-270 to 400ºC	-270 to 385ºC	-270 to 213ºC	-166 to 115ºC
mV	-80 to 80 mV	-80 to 80 mV	-40 to 40 mV	-20 to 20 mV	-10 to 10 mV	-5 to 5 mV

(2)-1-4 Accuracy by sensor type and measured temperature range
<CJ1W-PTS15 only>
For CS1W-PTS01-V1, the accuracy depends on the ratio of the set input range span (electromotive force conversion) to the selected internal range (0 to 4) span.

Temperature sensor type	Temperature range (ºC)	Standard accuracy	Details
B	0 to 1,820	±1.8ºC (±0.1%)	400 to 800ºC: ±3ºC Less than 400ºC: Accuracy is not specified.
E	-270 to 1,000	±0.6ºC (±0.05%)	-250 to -200ºC: ±1.2ºC Less than -250ºC: Accuracy is not specified.
J	-210 to 1,200	±0.7ºC (±0.05%)	---
K	-270 to 1,372	±0.8ºC (±0.05%)	-250 to -200ºC: ±2ºC Less than -250ºC: Accuracy is not specified.
N	-270 to 1,300	±0.8ºC (±0.05%)	-200 to -150ºC: ±1.6ºC Less than -200ºC: Accuracy is not specified.
R	-50 to 1,769	±1.8ºC (±0.1%)	0 to 100ºC: ±2.5ºC Less than 0ºC: 3.2ºC
S	-50 to 1,769	±1.8ºC (±0.1%)	0 to 100ºC: ±2.5ºC Less than 0ºC: ±3.2ºC
T	-270 to 400	±0.35ºC (±0.05%)	-180 to 0ºC: ±0.7ºC -200 to -180ºC: ±1.3ºC Less than -200ºC: Accuracy is not specified.
L	-200 to 900	±0.5ºC (±0.05%)	---
U	-200 to 600	±0.4ºC (±0.05%)	-100 to 0ºC: ±0.5ºC Less than -100ºC: ±0.7ºC
WRe5-26	0 to 2,315	±1.2ºC (±0.05%)	More than 2,200ºC: ±1.4ºC
PL II	0 to 1,395	±0.7ºC (±0.05%)	---

(3) Differences in memory area allocations

■ DM Areas

・ The area allocations change. If they are programmed, replace them by referring to the manual.

Below are the major differences.

<CS1W-PTS01-V1>

DM area address				Data range		Default	Data content
Input No. 1	Input No. 2	Input No. 3	Input No. 4	Decimal	Hexadecimal		
m+34	m+49	m+64	m+79	0 to 8	0000 to 0008 hex	3 (0003 hex)	● Sensor type 0: B, 1: E, 2: J, 3: K, 4: N, 5: R, 6: S, 7: T, 8: mV
m+48	m+63	m+78	m+93	1 to 16	0001 to 0010 hex	4 (0004 hex)	● Mean value processing function Number of process values for calculating moving average for mean value processing
m+94	m+95	m+96	m+97	0 to 93	0000 to 005D hex	0 (0000 hex)	● Display parameter Data range error address
-	-	-	-	-	-	-	● Expansion setting area allocations

<CJ1W-PTS15>

DM area address		Data range		Default	Data content
Input No. 1	Input No. 2	Decimal	Hexadecimal		
m+34	m+49	0 to 12	0000 to 000C hex	3 (0003 hex)	● Sensor type 0: B, 1: E, 2: J, 3: K, 4: N, 5: R, 6: S, 7: T, 8: mV, 9: L, 10: U, 11: Wre5-26, 12: PL II
m+48	m+63	1 to 128	0001 to 0080 hex	25 (0019 hex)	● Mean value processing function Number of process values for calculating moving average for mean value processing
m+94	m+95	0 to 99, 100 to 1XX	0000 to 0063 hex 0064 to 0XXX hex	0 (0000 hex)	● Display parameter Data range error address
m+98		0 to 5	0000 to 0005 hex	-	● Expansion setting area allocations Expansion setting area allocations 0: Not used, 1: DM, 2: CIO, 3: W, 4: H, 5: EM
m+99		0 to 32767	0000 to 7FFF hex	-	First word of expansion setting area

■ Expansion Setting Areas
<CJ1W-PTS15 only>
* CS1W-PTS01-V1 does not support specifying an expansion setting area.
First word: word o. (o = address specified in word m+99 in the area specified in word m+98 in the DM area)

Memory area address		Data range		Default	Data content
Input No. 1	Input No. 2	Decimal	Hexadecimal		
o		0 to 5	0000 to 0005 hex	-	● Expansion control/monitor area settings Expansion control/monitor area allocation 0: Not used, 1: DM, 2: CIO, 3: W, 4: H, 5: EM
o+1		0 to 32767	0000 to 7FFF hex	-	First word of expansion control/monitor area
o+2	o+13	0 to 32000	0000 to 7D00 hex	10000 (2710 hex)	● Zero/span adjustment supplementary function Span adjustment position (Input span percentage)
o+3	o+14	-32000 to 32000	8300 to FFFF hex 0000 to 7D00 hex	0 (0000 hex)	Zero adjustment position (Input span percentage)
o+4	o+15	0 to 9999	0000 to 270F hex	365 (016D hex)	Zero/span adjustment period (unit: days)
o+5	o+16	0 to 9999	0000 to 270F hex	30 (001E hex)	Notice of days remaining (unit: days)
o+6 to o+8	o+17 to o+19	-	-	0 (0000 hex)	● Not used
o+9	o+20	0 to 32000	0000 to 7D00 hex	40 (0028 hex)	● Top and valley hold Hysteresis
o+10	o+21	-	-	0 (0000 hex)	● Not used
o+11	o+22				
o+12	o+23				

■ CIO Areas
Direction: This Unit → CPU Unit

Word	Bit	CS1W-PTS01-V1				CJ1W-PTS15				
		Name		Data range	Description	Difference	Name		Data range	Description
n	00	Input No. 1	Process value LL (low low limit) alarm	0, 1	0: Process value > Set value 1: Process value ≤ Set value	○	Input No. 1	Process value LL (low low limit) alarm	0, 1	0: Process value > Set value 1: Process value ≤ Set value
	01		Process value L (low limit) alarm	0, 1				Process value L (low limit) alarm	0, 1	
	02		Process value H (high limit) alarm	0, 1	0: Process value < Set value 1: Process value ≥ Set value			Process value H (high limit) alarm	0, 1	0: Process value < Set value 1: Process value ≥ Set value
	03		Process value HH (high high limit) alarm	0, 1				Process value HH (high high limit) alarm	0, 1	
	04	Input No. 2	Process value LL (low low limit) alarm	0, 1	Same as for input No. 1.	○	Input No. 2	Process value LL (low low limit) alarm	0, 1	Same as for input No. 1.
	05		Process value L (low limit) alarm					Process value L (low limit) alarm	0, 1	
	06		Process value H (high limit) alarm					Process value H (high limit) alarm	0, 1	
	07		Process value HH (high high limit) alarm					Process value HH (high high limit) alarm	0, 1	
	08	Input No. 3	Process value LL (low low limit) alarm			×	Not used		0	---

Word	Bit	CS1W-PTS01-V1				CJ1W-PTS15				
		Name		Data range	Description	Difference	Name		Data range	Description
	09		Process value L (low limit) alarm							
	10		Process value H (high limit) alarm							
	11		Process value HH (high high limit) alarm							
	12	Input No. 4	Process value LL (low low limit) alarm							
	13		Process value L (low limit) alarm							
	14		Process value H (high limit) alarm							
	15		Process value HH (high high limit) alarm							
n+1	00 to 15	Input No. 1	Process value	-32768 to 32767 (8000 to FFFF hex, 0000 to 7FFF hex)	The present process value is stored according to the scaling set in the allocated words of the DM area.	○	Input No. 1	Process value	-32768 to 32767 (8000 to FFFF hex, 0000 to 7FFF hex)	The present process value is stored according to the scaling set in the allocated words of the DM area.
n+2	00 to 15	Input No. 2				○	Input No. 2			
n+3	00 to 15	Input No. 3				×	Not used		0000	---
n+4	00 to 15	Input No. 4								
n+5	00 to 15	Input No. 1	Rate-of-change value	-32768 to 32767 (8000 to FFFF hex, 0000 to 7FFF hex)	The process value rate of change is stored according to the scaling set in the allocated words of the DM area.	○	Input No. 1	Rate-of-change value	-32768 to 32767 (8000 to FFFF hex, 0000 to 7FFF hex)	The present rate of change is stored according to the scaling set in the allocated words of the DM area.
n+6	00 to 15	Input No. 2				○	Input No. 2			
n+7	00 to 15	Input No. 3				×	Not used		0000	---
n+8	00 to 15	Input No. 4								
n+9	00	Input No. 1	Rate-of-change value L (low limit) alarm	0, 1	0: Rate-of-change value > Set value 1: Rate-of-change value ≤ Set value	○	Input No. 1	Rate-of-change value L (low limit) alarm	0, 1	0: Rate-of-change value > Set value 1: Rate-of-change value ≤ Set value
	01		Rate-of-change value H (high limit) alarm	0, 1	0: Rate-of-change value < Set value 1: Rate-of-change value ≥ Set value			Rate-of-change value H (high limit) alarm	0, 1	0: Rate-of-change value < Set value 1: Rate-of-change value ≥ Set value
	02	Input No. 2	Rate-of-change value L (low limit) alarm	0, 1	Same as for input No. 1.	○	Input No. 2	Rate-of-change value L (low limit) alarm	0, 1	Same as for input No. 1.
	03		Rate-of-change value H (high limit) alarm					Rate-of-change value H (high limit) alarm		

Word	Bit	CS1W-PTS01-V1				CJ1W-PTS15				
		Name		Data range	Description	Difference	Name		Data range	Description
	04	Input No. 3	Rate-of-change value L (low limit) alarm			×	Not used		0	---
	05		Rate-of-change value H (high limit) alarm							
	06	Input No. 4	Rate-of-change value L (low limit) alarm							
	07		Rate-of-change value H (high limit) alarm							
	08	Input No. 1	Input disconnection	0, 1	0: Normal 1: Disconnection	○	Input No. 1	Input disconnection	0, 1	0: Normal 1: Disconnection
	09	Input No. 2				○	Input No. 2			
	10	Input No. 3				×	Not used		0	---
	11	Input No. 4								
	12	Cold junction sensor error		0, 1	0: Normal 1: Error	×	Cold junction sensor error		0, 1	0: Normal 1: Error
	13	Not used		0	---	◎	Zero/span adjustment period end		0, 1	0: Adjustment enabled 1: Adjustment ended
	14					◎	Zero/span adjustment period notice		0, 1	0: Adjustment enabled 1: Notice period
	15					◎	External power supply		0, 1	0: External power supply not used 1: External power supply used

Difference: Enhanced (◎), Equivalent (○), Degraded (△), or Incompatible feature (×)

■ Expansion Control/Monitor Areas

<CJ1W-PTS15 only>

* CS1W-PTS01-V1 does not support specifying an expansion control/monitor area.

First word: word p. (p = address specified in word o+1 in the area specified in word o in the expansion setting area)

Direction: CPU Unit → This Unit

Word	Bit	CJ1W-PTS15			
		Name		Data range	Description
p	00 to 15	Not used		0000	---
p+1	00	Input No. 1	Hold function selection	0, 1	0: Peak and bottom 1: Top and valley
	01	Input No. 2			
	02 to 07	Not used		0	---
	08	Input No. 1	Hold start	0, 1	0: Do not hold 1: Hold
	09	Input No. 2			
	10, 11	Not used		0	---
	12	Input No. 1	Hold value reset	0, 1	0: Normal operation 1: Reset hold value
	13	Input No. 2			
	14, 15	Not used		0	---
p+2	00	Input No. 1	Zero/span adjustment update bit	0, 1	0: Normal operation 1: Update adjustment date (Remains ON while writing in external FROM.)
	01	Input No.			
	02 to 15	Not used		0	---

Direction: This Unit → CPU Unit

Word	Bit	CS1W-PTS01-V1			
		Name		Data range	Description
p+3	00	Input No. 1	Zero/span adjustment period end	0, 1	0: Adjustment enabled 1: Adjustment ended
	01		Zero/span adjustment period notice	0, 1	0: Adjustment enabled 1: Notice period Remains set to 1 if the zero/span adjustment bit has never been ON.
	02	Input No. 2	Zero/span adjustment period end	0, 1	Same as for input No. 1.
	03		Zero/span adjustment period notice	0, 1	
	04 to 07	Not used		0	---
	08	External FROM error flag		0, 1	0: Normal operation 1: External FROM error
	09 to 15	Not used		0	---
p+4	00 to 15	Input No. 1	Day of final adjustment date	0100 to 3100 (BCD)	・Stores the date when the update bit turned ON last. ・Remains set to FFFF if the zero/span adjustment bit has never been ON.
p+5	00 to 15		Year and month of final adjustment date	0001 to 9912 (BCD)	
p+6	00 to 15	Input No. 2	Day of final adjustment date	0100 to 3100 (BCD)	
p+7	00 to 15		Year and month of final adjustment date	0001 to 9912 (BCD)	
p+8 to p+15		Not used		0000	---
p+16	00 to 15	Input No. 1	Peak/top value	-32728 to 32767 (8000 to FFFF hex, 0000 to 7FFF hex)	The peak or top value is stored according to the scaling set in the DM area.
p+17	00 to 15		Bottom/valley value	-32728 to 32767 (8000 to FFFF hex, 0000 to 7FFF hex)	The bottom or valley value is stored according to the scaling set in the DM area.
p+18	00 to 15	Input No. 2	Peak/top value	-32728 to 32767 (8000 to FFFF hex, 0000 to 7FFF hex)	Same as for input No. 1.
p+19	00 to 15		Bottom/valley value	-32728 to 32767 (8000 to FFFF hex, 0000 to 7FFF hex)	
p+20 to p+34		Not used		0000	---

(4) Differences in wiring and terminal arrangement

CS1W-PTS01-V1	CJ1W-PTS15
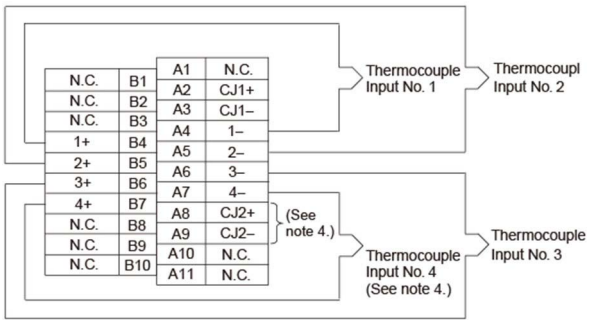 Cold junction sensors are installed between A2 and A3, and between A8 and A9 when the product is shipped.	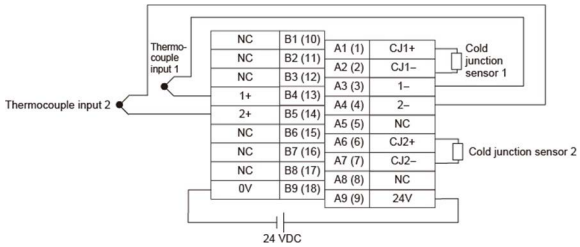

Reference manuals

CS1W-PTS01-V1: *CS/CJ-series Analog I/O Units Operation Manual* (Cat. No. W368)

CJ1W-PTS15: *CS/CJ-series Analog I/O Units Operation Manual* (Cat. No. W368)

Appendix 6.13. CS1W-PTS12

(1) Selection of a replacement model and notes for replacement

Replacement model	Notes and restrictions
CJ1W-PH41U	● Pt50 and Ni508.4 temperature sensors will not be supported. ● Different in the DM areas. ● Different in the expansion setting areas. ● Different in the CIO areas. ● Additional expansion control/monitor areas will be provided. ● Different in the terminal block, terminal arrangement, and wiring.

(2) Differences in functions and capabilities

Item	CS1W-PTS12	CJ1W-PH41U	
	Specifications	Difference	Specifications
Number of temperature sensor inputs	4	○	4
Temperature sensor type	・ Pt100 (JIS, IEC), JPt100, Pt50, Ni508.4 ・ The sensor type, input range, and scaling can be set individually for each of 4 inputs.	△	・ Pt100 (JIS, IEC 3-wire), JPt100 (3-wire), Pt1000 (3-wire), Pt100 (JIS, IEC 4-wire) * Pt1000 (3-wire) is supported for 1/256,000 resolution only. ・ The input type, input range, and scaling can be set for individual inputs.
Scaling	・ Data to be stored in the allocated words in the CIO area must be scaled (with the minimum and maximum values set by user) (4 inputs set separately). ・ For example, data can be converted at 0% to 100%.	△	・ Data to be stored in the allocated words in the CIO area must be scaled (with user-set minimum and maximum values for data and offsets). The inputs are set individually. ・ For example, data can be converted at 0% to 100%.
Data storage in the CIO area	The value derived from carrying out the following processing in order on the actual process data in the input range is stored in four digits hexadecimal (binary values) in the allocated words. ・ 1) Mean value processing → 2) Scaling → 3) Zero/span adjustment → 4) Output limits	△	・ The value derived from carrying out the following processing in order on the actual process data in the input range is stored in four digits hexadecimal (binary values) in the allocated words. ・ 1) Mean value processing → 2) Scaling → 3) Zero/span adjustment → 4) Output limits → 5) Offset compensation → 6) Output limits
Accuracy (25ºC)	±0.05% or ±0.1ºC, whichever is greater	△	±0.05% (The accuracy depends on the input type and the measured temperature. For details, refer to *(2)-1-2 Accuracy by resistance thermometer input type and measured temperature*.)
Temperature coefficient	Pt100: ±0.009%/ºC JPt100: ±0.01%/ºC Pt50: ±0.02%/ºC Ni508.4: ±0.012%/ºC	△	The temperature coefficient depends on the input type and the measured temperature. For details, refer to *(2)-1-2 Accuracy by resistance thermometer input type and measured temperature*.
Resolution	1/64,000	◎	1/256,000, 1/64,000
Sensing method	3-wire	◎	3-wire, 4-wire
Allowable lead wire resistance	20 Ω max. per wire	×	-
Influence of lead wire resistance	-	◎	0.06ºC/Ω (20 Ω max.) (3-wire) 0.006ºC/Ω (20 Ω max.) (4-wire)
Input detection current	0.5 mA	△	Approx. 0.21 mA (3-wire), approx. 0.42 mA (4-wire)
Warm-up period	10 minutes	△	30 minutes
Response time	100 ms (travel time from input 0% to 90%, for step input and with moving average for 4 samples)	◎	・ 1/256,000 resolution: 180 ms max. (travel time from input 0% to 90%, for step input and with moving average for 1 sample) ・ 1/64,000 resolution: 100 ms max. (travel time from input 0% to 90%, for step input and with moving average for 4 samples)

Item		CS1W-PTS12	CJ1W-PH41U	
		Specifications	Difference	Specifications
Conversion period		20 ms/4 points or 10 ms/2 points, selectable in DM area words allocated to Unit as a Special I/O Unit.	◎	60 ms/4 points (1/256,000 resolution) 10 ms/4 points (1/64,000 resolution)
Maximum time to store data in CPU Unit		Conversion period + one CPU Unit cycle	○	Conversion period + one CPU Unit cycle
Disconnection detection		・ Detects disconnections at each input and turns ON the disconnection detection flag. ・ Burnout detection time: Approx. 0.5 s max. ・ The process value overrange direction for when a disconnection occurs can be specified. (High: 115% of set input range; low: -15% of set input range)	△	・ Input error flag turns ON when a disconnection occurs or when 115% or -15% of the measurable input range is exceeded. ・ The process value overrange direction for when a disconnection occurs can be specified. (High: 115% of set input range; low: -15% of set input range) ・ Disconnection detection time: Approx. 5 s max. (4-wire Pt100) Approx. 0.5 s max. (except for 4-wire Pt100)
Functions	Mean value processing (input filter)	Calculates the moving average for the specified number of process values (1 to 128), and stores that value in the CIO Area as the process value.	○	Calculates the moving average for the specified number of process values (1 to 128), and stores that value in the CIO Area as the process value.
	Process value alarm	Process value 4-point alarm (LL, L, H, HH), alarm hysteresis, and ON-delay timer (0 to 60 s) are available.	○	Process value 4-point alarm (LL, L, H, HH), alarm hysteresis, and ON/OFF-delay timer (0 to 60 s) are available.
	Rate-of-change calculation	Calculates the amount of change per comparison time interval (1 to 16 s).	△	Calculates the amount of change per process value comparison time interval (Either 1 to 16 s or the conversion period can be set.)
	Rate-of-change alarm	Rate-of-change 2-point alarm (L, H), alarm hysteresis, and ON-delay timer (0 to 60 s, shared with process value alarm) are available.	○	Rate-of-change 2-point alarm (L, H), alarm hysteresis, and ON/OFF-delay timer (0 to 60 s, shared with process value alarm) are available.
	Adjustment period control	When zero/span adjustment is executed, the date is internally recorded at the Unit. When the preset zero/span adjustment period and number of days notice have elapsed (allocated in expansion setting area), this function turns ON a warning flag to give notice that it is time for readjustment.	○	When zero/span adjustment is executed, the date is internally recorded at the Unit. When the preset zero/span adjustment period and number of days notice have elapsed (allocated in expansion setting area), this function turns ON a warning flag to give notice that it is time for readjustment.
	Peak and bottom detection	This function detects the maximum (peak) and minimum (bottom) analog input values, from when the hold start bit (output) allocated to the expansion control/monitor area turns ON until it turns OFF, and stores them in the expansion control/monitor area.	○	This function detects the maximum (peak) and minimum (bottom) process values, from when the hold start bit (output) allocated to the expansion control/monitor area turns ON until it turns OFF, and stores them in the expansion control/monitor area.
	Top and valley detection	This function detects the top and valley values for analog inputs, from when the hold start bit (output) allocated to the Expansion Control/Monitor Area turns ON until it turns OFF, and stores them in the expansion control/monitor area.	○	This function detects the top and valley values for process values, from when the hold start bit (output) allocated to the expansion control/monitor area turns ON until it turns OFF, and stores them in the expansion control/monitor area.
	Integral value calculation	-	◎	・ This function calculates the process value's time integral. ・ The integral value is calculated and the result is output to the expansion control/monitor area when the integral value calculation start bit in the expansion control/monitor area is turned ON.

Item		CS1W-PTS12	CJ1W-PH41U	
		Specifications	Difference	Specifications
	Resistance thermometer input compensation	-	◎	・Compensation is enabled for a connected resistance thermometer by setting the resistance for 23ºC. ・Note: This function is supported only for resistance thermometer inputs.
Isolation		・Between inputs and PLC signals: Transformer for power supply and photocoupler for signals ・Between inputs: Transformer for power supply and photocoupler for signals	△	・Between inputs and PLC signals: Transformer for power supply and digital isolator for signals ・Between inputs: Transformer for power supply and digital isolator for signals
Insulation resistance		Between all channels: 20 MΩ (500 VDC with an insulation resistance tester)	○	Between all channels: 20 MΩ (500 VDC with an insulation resistance tester)
Dielectric strength		Between all channels: 1,000 VAC, 50/60 Hz, 1 min, leakage current 10 mA max.	△	Between all channels: 500 VAC, 50/60 Hz, 1 min, leakage current 10 mA max.

Difference: Enhanced (◎), Equivalent (○), Degraded (△), or Incompatible feature (×)

(2)-1-1 Measurable input ranges

Sensor type	CS1W-PTS12		CJ1W-PH41U		
	DM area setting	Measurable input range	Difference	DM area setting	Measurable input range
Pt100 (3-wire)	0	-200 to 850ºC	○	0	-200 to 850ºC
JPt100 (3-wire)	1	-200 to 500ºC	○	3	-200 to 500ºC
Pt1000 (3-wire)	-	-	◎	7 *1	-200 to 850ºC
JPt100 (4-wire)	-	-	◎	9	-200 to 850ºC
				10 *1	0 to 50ºC
Pt50	2	-200 to 649ºC	×	-	-
Ni508.4	3	-50 to 150ºC	×	-	-

Difference: Enhanced (◎), Equivalent (○), Degraded (△), or Incompatible feature (×)

*1. Only for 1/256,000 resolution

(2)-1-2 Accuracy by resistance thermometer input type and measured temperature

Input classification		Measured temperature (ºC)	Standard accuracy ºC (%)	Temperature coefficient ºC/ºC (ppm/ºC)
Temperature sensor type	Temperature range (ºC)			
Pt100 (3-wire)	-200.00 to 850.00	-200.00 to -50.00	±0.5ºC (±0.05%)	±0.08ºC/ºC (±78 ppm/ºC)
		-50.00 to 150.00	±0.21ºC (±0.02%)	±0.03ºC/ºC (±29 ppm/ºC)
		150.00 to 850.00	±0.5ºC (±0.05%)	±0.08ºC/ºC (±78 ppm/ºC)
JPt100 (3-wire)	-200.00 to 500.00	Same as on the left	±0.4ºC (±0.05%)	±0.07ºC/ºC (±96 ppm/ºC)
Pt1000 (3-wire)	-200.00 to 850.00	Same as on the left	±0.5ºC (±0.05%)	±0.09ºC/ºC (±85 ppm/ºC)
Pt100 (4-wire)	-200.00 to 850.00	Same as on the left	±0.5ºC (±0.05%)	±0.02ºC/ºC (±17 ppm/ºC)
	0.000 to 50.000	Same as on the left	±0.025ºC (±0.05%)	±0.005ºC/ºC (±90 ppm/ºC)

(3) Differences in memory area allocations

■ DM Areas

・ The area allocations change. If they are programmed, replace them by referring to the manual.
Below are the major differences.

<CS1W-PTS12>

DM area address				Data range		Default	Data content
Input No. 1	Input No. 2	Input No. 3	Input No. 4	Decimal	Hexadecimal		
m+1				0, 1	0000 hex 0001 hex	0 (0000 hex)	● Number of inputs setting 0: 4 inputs, 1: 2 inputs
m+2	m+10	m+18	m+26	-32768 to 32767	8000 to FFFF hex 0000 to 7FFF hex	4200 (1068 hex)	● Process value alarm settings Process value HH (high high limit) alarm setting (Set as a process value scaling value.)
m+3	m+11	m+19	m+27	-32768 to 32767	8000 to FFFF hex 0000 to 7FFF hex	4000 (0FA0 hex)	Process value H (high limit) alarm setting (Set as a process value scaling value.)
m+4	m+12	m+20	m+28	-32768 to 32767	8000 to FFFF hex 0000 to 7FFF hex	0 (0000 hex)	Process value L (low limit) alarm setting (Set as a process value scaling value.)
m+5	m+13	m+21	m+29	-32768 to 32767	8000 to FFFF hex 0000 to 7FFF hex	-200 (FF38 hex)	Process value LL (low low limit) alarm setting (Set as a process value scaling value.)
m+6	m+14	m+22	m+30	-32768 to 32767	8000 to FFFF hex 0000 to 7FFF hex	4000 (0FA0 hex)	● Rate-of-change value alarm settings Rate-of-change value H (high limit) alarm setting (Set as a rate-of-change scaling value.)
m+7	m+15	m+23	m+31	-32768 to 32767	8000 to FFFF hex、 0000 to 7FFF hex	0 (0000 hex)	Rate-of-change value L (low limit) alarm setting (Set as a rate-of-change scaling value.)
m+8	m+16	m+24	m+32	0 to 32000	0000 to 7D00 hex	10000 (2710 hex)	● Zero/span adjustment Gain for span adjustment (set value x 0.0001%)
m+9	m+17	m+25	m+33	-32000 to 32000	8300 to FFFF hex 0000 to 7D00 hex	0 (0000 hex)	Zero adjustment value (Set as a process value scaling value.)
m+34	m+49	m+64	m+79	0 to 3	0000 to 0003 hex	0 (0000 hex)	● Sensor type 0: Pt100, 1: JPt100, 2: Pt50, 3: Ni508.4
m+35	m+50	m+65	m+80	-32000 to 32000	8300 to FFFF hex 0000 to 7D00 hex	4000 (0FA0 hex)	● Process value input range settings Maximum input signal value (set value x 0.1ºC/ºF)
m+36	m+51	m+66	m+81	-32000 to 32000	8300 to FFFF hex 0000 to 7D00 hex	0 (0000 hex)	Minimum input signal value (set value x 0.1ºC/ºF)
m+39	m+54	m+69	m+84	-32000 to 32000	8300 to FFFF hex 0000 to 7D00 hex	4000 (0FA0 hex)	● Process value scaling Value stored for maximum value in range (span)
m+40	m+55	m+70	m+85	-32000 to 32000	8300 to FFFF hex 0000 to 7D00 hex	0 (0000 hex)	Value stored for minimum value in range (zero)
m+41	m+56	m+71	m+86	0 to 32000	0000 to 7D00 hex	40 (0028 hex)	● Alarm supplementary functions Alarm hysteresis (Set as a process value scaling value.) (Shared with process value alarm and rate-of-change alarm.)
m+42	m+57	m+72	m+87	0 to 60	0000 to 003C hex	0 (0000 hex)	Alarm ON-delay time (unit: s) (Shared with process value alarm and rate-of-change alarm.)

DM area address				Data range		Default	Data content	
Input No. 1	Input No. 2	Input No. 3	Input No. 4	Decimal	Hexadecimal			
m+43	m+58	m+73	m+88	-32000 to 32000	8300 to FFFF hex 0000 to 7D00 hex	4000 (0FA0 hex)	Rate-of-change range setting	● Rate-of-change function Maximum rate-of-change value (Set value industrial unit, comparison time interval)
m+44	m+59	m+74	m+89	-32000 to 32000	8300 to FFFF hex 0000 to 7D00 hex	-4000 (F060 hex)		Minimum rate-of-change value (Set value industrial unit, comparison time interval)
m+45	m+60	m+75	m+90	1 to 16	0001 to 0010 hex	1 (0001 hex)	Rate-of-change comparison time interval (unit: s)	
m+46	m+61	m+76	m+91	-32000 to 32000	8300 to FFFF hex 0000 to 7D00 hex	4000 (0FA0 hex)	Rate-of-change value scaling	Value stored for maximum value in range
m+47	m+62	m+77	m+92	-32000 to 32000	8300 to FFFF hex 0000 to 7D00 hex	-4000 (F060 hex)		Value stored for minimum value in range
m+48	m+63	m+78	m+93	1 to 128	0001 to 0080 hex	25 (0019 hex)	● Mean value processing function Number of process values for calculating moving average for mean value processing	

<CJ1W-PH41U>

DM area address				Data range		Default	Data content	
Input No. 1	Input No. 2	Input No. 3	Input No. 4	Decimal	Hexadecimal			
m+1				(*1)	(*1)	0 (0000 hex)	● Operation settings Bits 00 to 03: Resolution switch Bits 04 to 07: Process value data length	
m+2	m+10	m+18	m+26	- 2147483648 to 2147483647	80000000 to FFFFFFFF hex, 00000000 to 7FFFFFFF hex	40000 (00009C40 hex)	Lower	● Process value alarm settings Process value H (high limit) alarm setting (Set as a process value scaling value.)
m+3	m+11	m+19	m+27				Upper	
m+4	m+12	m+20	m+28	- 2147483648 to 2147483647	80000000 to FFFFFFFF hex, 00000000 to 7FFFFFFF hex	0 (00000000 hex)	Lower	Process value L (low limit) alarm setting (Set as a process value scaling value.)
m+5	m+13	m+21	m+29				Upper	
m+6	m+14	m+22	m+30	1 to 100000000	00000001 to 05F5E100 hex	10000000 (00989680 hex)	Lower	● Zero/span adjustment Gain for span adjustment (set value x 0.0000001(10-7))
m+7	m+15	m+23	m+31				Upper	
m+8	m+16	m+24	m+32	- 2147483648 to 2147483647	80000000 to FFFFFFFF hex, 00000000 to 7FFFFFFF hex	0 (00000000 hex)	Lower	Zero adjustment value (Set as a process value scaling value.)
m+9	m+17	m+25	m+33				Upper	
m+34	m+49	m+64	m+79	0 to 50	0 to 32 hex	36 (0024 hex)	● Input signal type ・When the resolution switch is set to 0 (1/256,000) 0: Pt100 (3-wire) 3: JPt100 (3-wire) 7: Pt1000 (3-wire) 9: Pt100 (4-wire) (1) 10: Pt100 (4-wire) (2) ・When the resolution switch is set to 1 (1/64,000) 0: Pt100 (3-wire) 3: JPt100 (3-wire) 9: Pt100 (4-wire) (1)	

DM area address				Data range		Default	Data content	
Input No. 1	Input No. 2	Input No. 3	Input No. 4	Decimal	Hexadecimal			
m+35	m+50	m+65	m+80	-32000 to 32000	8300 to FFFF hex 0000 to 7D00 hex	10000 (2710 hex)	● Process value input range settings Maximum input signal value (Set value x 0.1ºC for ºC, set value x 0.1ºF for ºF)	
m+36	m+51	m+66	m+81	-32000 to 32000	8300 to FFFF hex 0000 to 7D00 hex	0 (0000 hex	Minimum input signal value (Set value x 0.1ºC for ºC, set value x 0.1ºF for ºF)	
m+39	m+54	m+69	m+84	- 2147483648 to 2147483647	80000000 to FFFFFFFF hex, 00000000 to 7FFFFFFF hex	10000 (00002710 hex)	Lower	● Process value scaling Maximum scaling value (value stored for maximum value in range (span))
m+40	m+55	m+70	m+85				Upper	
m+41	m+56	m+71	m+86	- 2147483648 to 2147483647	80000000 to FFFFFFFF hex, 00000000 to 7FFFFFFF hex	0 (00000000 hex)	Lower	Minimum scaling value (value stored for minimum value in range (zero))
m+42	m+57	m+72	m+87				Upper	
m+43	m+58	m+73	m+88	- 2147483648 to 2147483647	80000000 to FFFFFFFF hex, 00000000 to 7FFFFFFF hex	0 (0000000 hex)	Lower	Scaling offset
m+44	m+59	m+74	m+89				Upper	
m+45	m+60	m+75	m+90	0 to 32767	0000 to 7FFF hex	40 (0028 hex)	● Alarm supplementary functions Alarm hysteresis (Set as a process value scaling value.) (Shared with process value alarm and rate-of-change alarm.)	
m+46	m+61	m+76	m+91	0 to 60	0000 to 003C hex	0 (0000 hex)	Alarm ON-delay time (unit: s) (Shared with process value alarm and rate-of-change alarm.)	
m+47	m+62	m+77	m+92	0 to 60	0000 to 003C hex	0 (0000 hex)	Alarm OFF-delay time (unit: s) (Shared with process value alarm and rate-of-change alarm.)	
m+48	m+63	m+78	m+93	0 to 128	0000 to 0080 hex	0 (0000 hex)	● Mean value processing function Number of process values for calculating moving average for mean value processing 0: 4 values for a resolution of 1/256,000, 25 values for a resolution of 1/64,000 or 1/16,000 1 to 128: Number of process values	

*1. The operation settings are as follows:

Addresses	Bit	Description	Setting
m+1	00 to 03	Resolution switch	0: 1/256,000 (conversion period: 60 ms) 1: 1/64,000 (conversion period: 10 ms) 2: 1/16,000 (conversion period: 5 ms)
	04 to 07	Process value data length (Sets the data length for the process value, rate of change, peak value, top value, bottom value, and valley value.)	0: 2 words (signed double word binary data) 1: 1 word (restricted to the following range: -32768 to 32767 (8000 to FFFF hex, 0000 to 7FFF hex).)

■ Expansion Setting Areas

・ The area allocations change. If they are programmed, replace them by referring to the manual.

Below are the major differences.

<CS1W-PTS12>

First word: word o. (o = address specified in word m+99 in the area specified in word m+98 in the DM area)

Memory area address				Data range		Default	Data content
Input No. 1	Input No. 2	Input No. 3	Input No. 4	Decimal	Hexadecimal		
o+9	o+20	o+31	o+42	0 to 32000	0000 to 7D00 hex	40 (0028 hex)	● Top and valley hold Hysteresis

<CJ1W-PH41U>

First word: word o. (o = address specified in word m+99 in the area specified in word m+98 in the DM area)

Memory area address				Data range		Default	Data content	
Input No. 1	Input No. 2	Input No. 3	Input No. 4	Decimal	Hexadecimal			
o	o+8	o+16	o+24	-2147483648 to 2147483647	80000000 to FFFFFFFF hex, 00000000 to 7FFFFFFF hex	42000 (0000A410 hex)	Lower	● Process value alarm settings Process value HH (high high limit) alarm setting (Set as a process value scaling value.)
o+1	o+9	o+17	o+25				Upper	
o+2	o+10	o+18	o+26	-2147483648 to 2147483647	80000000 to FFFFFFFF hex, 00000000 to 7FFFFFFF hex	-2000 (FFFFF830 hex)	Lower	Process value LL (low low limit) alarm setting (Set as a process value scaling value.)
o+3	o+11	o+19	o+27				Upper	
o+4	o+12	o+20	o+28	-2147483648 to 2147483647	80000000 to FFFFFFFF hex, 00000000 to 7FFFFFFF hex	40000 (00009C40 hex)	Lower	● Rate-of-change value alarm settings Rate-of-change value H (high limit) alarm setting (Set as a rate-of-change scaling value.)
o+5	o+13	o+21	o+29				Upper	
o+6	o+14	o+22	o+30	-2147483648 to 2147483647	80000000 to FFFFFFFF hex, 00000000 to 7FFFFFFF hex	0 (00000000 hex)	Lower	Rate-of-change value L (low limit) alarm setting (Set as a rate-of-change scaling value.)
o+7	o+15	o+23	o+31				Upper	
o+34	o+48	o+62	o+76	0, 1	0000, 0001 hex	0 (0000 hex)	Square root calculations Square root extraction (Valid when max. scaling value ≥ minimum scaling value.) 0: Disable, 1: Enable	
o+35	o+49	o+63	o+77	-32000 to 32000	8300 to FFFF hex 0000 to 7D00 hex	10000 (2710 hex)	● Rate-of-change function Rate-of-change range setting Maximum rate-of-change value (Set value industrial unit, comparison time interval)	
o+36	o+50	o+64	o+78	-32000 to 32000	8300 to FFFF hex 0000 to 7D00 hex	-10000 (D810 hex)	Minimum rate-of-change value (Set value industrial unit, comparison time interval)	
o+37	o+51	o+65	o+79	1 to 16	0001 to 0010 hex	1 (0001 hex)	Rate-of-change comparison time interval* Bits 00 to 07: Comparison time Bits 08 to 15: Unit	
o+38	o+52	o+66	o+80	-2147483648 to 2147483647	80000000 to FFFFFFFF hex, 00000000 to 7FFFFFFF hex	10000 (00002710 hex)	Lower	Rate-of-change value scaling Maximum rate-of-change scaling value (value stored for maximum value in range)
o+39	o+53	o+67	o+81				Upper	
o+40	o+54	o+68	o+82	-2147483648 to 2147483647	80000000 to FFFFFFFF hex, 00000000 to 7FFFFFFF hex	-10000 (FFFFD810 hex)	Lower	Minimum rate-of-change scaling value (value stored for minimum value in range)
o+41	o+55	o+69	o+83				Upper	
o+46	o+60	o+74	o+88	0 to 32767	0000 to 7FFF hex	40 (0028 hex)	● Top and valley hold Hysteresis	

Memory area address				Data range		Default	Data content	
Input No. 1	Input No. 2	Input No. 3	Input No. 4	Decimal	Hexadecimal			
o+47	o+61	o+75	o+89	*	*	0 (0000 hex)	● Integral value calculation* Bits 00 to 07: Integer unit Bits 08 to 15: Integer coefficient	
o+90				*	*	0 (0000 hex)	● Resistance thermometer input compensation Resistance thermometer input compensation enable*	
o+91	o+93	o+95	o+97	-2147483648 to 2147483647	80000000 to FFFFFFFF hex, 00000000 to 7FFFFFFF hex	1089585403 (40F1C0FB hex)	Lower	Reference resistance (resistance at 23ºC) (Set value x 0.0000001(10-7) Ω for Pt100 or JPt100, or set value x 0.000001(10-6) Ω for Pt1000)
o+92	o+94	o+96	o+98				Upper	
o+99				*	*	0 (0000 hex)	● Cold junction compensation method settings Cold junction compensation method*	

* The settings for the rate-of-change comparison time interval, integral value calculation, resistance thermometer compensation, and cold junction compensation method are as follows:

Addresses	Bit	Description	Setting	
o+37 o+51 o+65 o+79	00 to 07	Comparison time	Decimal	Hexadecimal
			1 to 16	0001 to 0010 hex
	08 to 15	Unit	0: s 1: Conversion period	
o+47 o+61 o+75 o+89	00 to 07	Integer unit	0: Minutes 1: Hours	
	08 to 15	Integer coefficient	0: 1 1: 1/10 2: 1/100 3: 1/1,000 4: 1/10,000	
o+90	00	Input No. 1 resistance thermometer input compensation	0: Disabled 1: Enabled	
	01	Input No. 2 resistance thermometer input compensation		
	02	Input No. 3 resistance thermometer input compensation		
	03	Input No. 4 resistance thermometer input compensation		
	04 to 15	Not used		
o+99	00	Input No. 1 cold junction compensation method	0: Internal (Use the unit's cold junction sensor.) 1: External (Do not use the unit's cold junction sensor.)	
	01	Input No. 2 cold junction compensation method		
	02	Input No. 3 cold junction compensation method		
	03	Input No. 4 cold junction compensation method		
	04 to 15	Not used		

■ CIO Areas
<CS1W-PTS12>
First word: n = 2000 + Unit No. x 10 (Unit number: 0 to 95)

Direction	Word	Bit	Name		Data range	Description
This Unit → CPU Unit	n	00	Input No. 1	Process value LL (low low limit) alarm	0, 1	0: Process value > Set value 1: Process value ≤ Set value
		01		Process value L (low limit) alarm	0, 1	
		02		Process value H (high limit) alarm	0, 1	0: Process value < Set value 1: Process value ≥ Set value
		03		Process value HH (high high limit) alarm	0, 1	
		04	Input No. 2	Process value LL (low low limit) alarm	0, 1	Same as for input No. 1.
		05		Process value L (low limit) alarm		
		06		Process value H (high limit) alarm		
		07		Process value HH (high high limit) alarm		
		08	Input No. 3	Process value LL (low low limit) alarm		
		09		Process value L (low limit) alarm		
		10		Process value H (high limit) alarm		
		11		Process value HH (high high limit) alarm		
		12	Input No. 4	Process value LL (low low limit) alarm		
		13		Process value L (low limit) alarm		
		14		Process value H (high limit) alarm		
		15		Process value HH (high high limit) alarm		
	n+1	00 to 15	Input No. 1	Process value	-32768 to 32767 (8000 to FFFF hex, 0000 to 7FFF hex)	The present process value is stored according to the scaling set in the allocated words of the DM area.
	n+2	00 to 15	Input No. 2			
	n+3	00 to 15	Input No. 3			
	n+4	00 to 15	Input No. 4			
	n+5	00 to 15	Input No. 1	Rate-of-change value	-32768 to 32767 (8000 to FFFF hex, 0000 to 7FFF hex)	The present rate of change is stored according to the scaling set in the allocated words of the DM area.
	n+6	00 to 15	Input No. 2			
	n+7	00 to 15	Input No. 3			
	n+8	00 to 15	Input No. 4			
	n+9	00	Input No. 1	Rate-of-change value L (low limit) alarm	0, 1	0: Rate-of-change value > Set value 1: Rate-of-change value ≤ Set value
		01		Rate-of-change value H (high limit) alarm	0, 1	0: Rate-of-change value < Set value 1: Rate-of-change value ≥ Set value
		02	Input No. 2	Rate-of-change value L (low limit) alarm	0, 1	Same as for input No. 1.
		03		Rate-of-change value H (high limit) alarm		
		04	Input No. 3	Rate-of-change value L (low limit) alarm		
		05		Rate-of-change value H (high limit) alarm		
		06	Input No. 4	Rate-of-change value L (low limit) alarm		

Direction	Word	Bit	Name		Data range	Description
		07		Rate-of-change value H (high limit) alarm		
		08	Input No. 1	Input disconnection	0, 1	0: Normal 1: Disconnection
		09	Input No. 2			
		10	Input No. 3			
		11	Input No. 4			
		12	Not used		0	-
		13	Zero/span adjustment period end		0, 1	0: Adjustment enabled 1: Adjustment ended
		14	Zero/span adjustment period notice		0, 1	0: Adjustment enabled 1: Notice period
		15	Not used		0	-

<CJ1W-PH41U>

First word: n = 2000 + Unit No. x 10 (Unit number: 0 to 95)

Direction	Word	Bit	Name			Data range	Description
This Unit → CPU Unit	n	00 to 15	Input No. 1	Lower	Process value	-2147483648 to 2147483647 (80000000 to FFFFFFFF hex, 00000000 to 7FFFFFFF hex)	The present process value is stored according to the scaling set in the allocated words of the DM area.
	n+1	00 to 15		Upper			
	n+2	00 to 15	Input No. 2	Lower			
	n+3	00 to 15		Upper			
	n+4	00 to 15	Input No. 3	Lower			
	n+5	00 to 15		Upper			
	n+6	00 to 15	Input No. 4	Lower			
	n+7	00 to 15		Upper			
	n+8	00	Input No. 1	Process value LL (low low limit) alarm		0, 1	0: Process value > Set value 1: Process value ≤ Set value
		01		Process value L (low limit) alarm		0, 1	
		02		Process value H (high limit) alarm		0, 1	0: Process value < Set value 1: Process value ≥ Set value
		03		Process value HH (high high limit) alarm		0, 1	
		04	Input No. 2	Process value LL (low low limit) alarm		0, 1	Same as for input No. 1.
		05		Process value L (low limit) alarm			
		06		Process value H (high limit) alarm			
		07		Process value HH (high high limit) alarm			
		08	Input No. 3	Process value LL (low low limit) alarm			
		09		Process value L (low limit) alarm			
		10		Process value H (high limit) alarm			
		11		Process value HH (high high limit) alarm			
		12	Input No. 4	Process value LL (low low limit) alarm			
		13		Process value L (low limit) alarm			
		14		Process value H (high limit) alarm			
		15		Process value HH (high high limit) alarm			
	n+9	00	Input No. 1	Rate-of-change value L (low limit) alarm		0, 1	0: Rate-of-change value > Set value 1: Rate-of-change value ≤ Set value
		01		Rate-of-change value H (high limit) alarm		0, 1	0: Rate-of-change value < Set value 1: Rate-of-change value ≥ Set value

Direction	Word	Bit	Name		Data range	Description
		02	Input No. 2	Rate-of-change value L (low limit) alarm	0, 1	Same as for input No. 1.
		03		Rate-of-change value H (high limit) alarm		
		04	Input No. 3	Rate-of-change value L (low limit) alarm		
		05		Rate-of-change value H (high limit) alarm		
		06	Input No. 4	Rate-of-change value L (low limit) alarm		
		07		Rate-of-change value H (high limit) alarm		
		08	Input No. 1	Input disconnection	0, 1	0: Normal 1: Disconnection
		09	Input No. 2			
		10	Input No. 3			
		11	Input No. 4			
		12	Cold junction sensor error		0, 1	0: Normal 1: Error
		13	Zero/span adjustment period end		0, 1	0: Adjustment enabled 1: Adjustment ended Remains set to 1 if the zero/span adjustment bit has never been ON.
		14	Zero/span adjustment period notice		0, 1	0: Adjustment enabled 1: Notice period Remains set to 1 if the zero/span adjustment bit has never been ON.
		15	A/D conversion error		0, 1	0: Normal 1: Error

■ Expansion Control/Monitor Areas

First word: word p. (p = address specified in word o+1 in the area specified in word o in the expansion setting area)

Direction: CPU Unit → This Unit

Word	Bit	CS1W-PTS12				CJ1W-PH41U				
		Name		Data range	Description	Difference	Name		Data range	Description
p	00 to 15	Not used		0000	---	○	Not used		0000	----
p+1	00	Input No. 1	Hold function selection	0, 1	0: Peak and bottom 1: Top and valley	○	Input No. 1	Hold function selection	0, 1	0: Peak and bottom 1: Top and valley
	01	Input No. 2					Input No. 2			
	02	Input No. 3					Input No. 3			
	03	Input No. 4					Input No. 4			
	04 to 07	Not used		0	--	○	Not used		0	---
	08	Input No. 1	Hold start	0, 1	0: Do not hold 1: Hold	○	Input No. 1	Hold start	0, 1	0: Do not hold 1: Hold
	09	Input No. 2					Input No. 2			
	10	Input No. 3					Input No. 3			
	11	Input No. 4					Input No. 4			
	12	Input No. 1	Hold value reset	0, 1	0: Normal operation 1: Reset hold value	○	Input No. 1	Hold value reset	0, 1	0: Normal operation 1: Reset hold value
	13	Input No. 2					Input No. 2			
	14	Input No. 3					Input No. 3			
	15	Input No. 4					Input No. 4			
p+2	00	Input No. 1	Zero/span adjustment update bit	0, 1	0: Normal operation 1: Update adjustment date (Remains ON while writing in external FROM.)	×	Input No. 1	Integral value calculation start	0, 1	0: Do not start calculation 1: Start calculation
	01	Input No. 2					Input No. 2			
	02	Input No. 3					Input No. 3			
	03	Input No. 4					Input No. 4			
	04	Not used		0	---	×	Input No. 1	Integral value reset	0, 1	0: Normal operation 1: Reset integral value
	05						Input No. 2			
	06						Input No. 3			
	07						Input No. 4			
	08 to 15					○	Not used		0	---
p+2	00	-		-	-	×	Input No. 1	Zero/span adjustment update bit	0, 1	0: Normal operation 1: Update adjustment date (Remains ON while writing in external EEPROM.)
	01						Input No. 2			
	02						Input No. 3			
	03						Input No. 4			
	04 to 07						Not used		---	

Difference: Enhanced (◎), Equivalent (○), Degraded (△), or Incompatible feature (×)

Direction: This Unit → CPU Unit

Word	Bit	CS1W-PTS12				CJ1W-PH41U			
		Name		Data range	Description	Difference	Name	Data range	Description
p+3	00	Input No. 1	Zero/span adjustment period end	0, 1	0: Adjustment enabled 1: Adjustment ended	×	-	-	-
	01		Zero/span adjustment period notice	0, 1	0: Adjustment enabled 1: Notice period Remains set to 1 if the zero/span adjustment bit has never been ON.				
	02	Input No. 2	Zero/span adjustment period end	0, 1	Same as for input No. 1.				
	03		Zero/span adjustment period notice						
	04	Input No. 3	Zero/span adjustment period end						
	05		Zero/span adjustment period notice						
	06	Input No. 4	Zero/span adjustment period end						
	07		Zero/span adjustment period notice						
	08	External FROM error flag		0, 1	0: Normal operation 1: External FROM error				
	09 to 15	Not used		0	---				

Word	Bit	CS1W-PTS12				CJ1W-PH41U					
		Name		Data range	Description	Difference	Name			Data range	Description
p+4	00 to 15	Input No. 1	Day of final adjustment date	0100 to 3100 (BCD)	・Stores the date when the update bit turned ON last. ・Remains set to FFFF if the zero/span adjustment bit has never been ON.	×	Input No. 1	Lower	Rate-of-change value	-2147483648 to 2147483647 (80000000 to FFFFFFFF hex, 00000000 to 7FFFFFFF hex)	The present rate-of-change value is stored according to the scaling set in the expansion setting area.
p+5	00 to 15		Year and month of final adjustment date	0001 to 9912 (BCD)				Upper			
p+6	00 to 15	Input No. 2	Day of final adjustment date	0100 to 3100 (BCD)			Input No. 2	Lower			
p+7	00 to 15		Year and month of final adjustment date	0001 to 9912 (BCD)				Upper			
p+8	00 to 15	Input No. 3	Day of final adjustment date	0100 to 3100 (BCD)			Input No. 3	Lower			
p+9	00 to 15		Year and month of final adjustment date	0001 to 9912 (BCD)				Upper			
p+10	00 to 15	Input No. 4	Day of final adjustment date	0100 to 3100 (BCD)			Input No. 4	Lower			
p+11	00 to 15		Year and month of final adjustment date	0001 to 9912 (BCD)				Upper			
p+12	00	Not used		0000	---	×	Input No. 1	Zero/span adjustment period end		0, 1	0: Adjustment enabled 1: Adjustment ended Remains set to 1 if the zero/span adjustment bit has never been ON.
	01							Zero/span adjustment period notice		0, 1	0: Adjustment enabled 1: Notice period Remains set to 1 if the zero/span adjustment bit has never been ON.
	02						Input No. 2	Zero/span adjustment period end		0, 1	Same as for input No. 1.
	03							Zero/span adjustment period notice			
	04						Input No. 3	Zero/span adjustment period end			
	05							Zero/span adjustment period notice			
	06						Input No. 4	Zero/span adjustment period end			
	07							Zero/span adjustment period notice			
	08						EEPROM error			0, 1	0: Normal 1: Error
	09 to 15					○	Not used			0	-

Word	Bit	CS1W-PTS12				CJ1W-PH41U				
		Name		Data range	Description	Difference	Name		Data range	Description
p+13	00 to 15	Not used		0000	---	×	Input No. 1	Day of final adjustment date	0100 to 3100 (BCD)	・Stores the date when the update bit turned ON last. ・Remains set to FFFF if the zero/span adjustment bit has never been ON.
p+14	00 to 15							Year and month of final adjustment date	0001 to 9912 (BCD)	
p+15	00 to 15						Input No. 2	Day of final adjustment date	0100 to 3100 (BCD)	
p+16	00 to 15	Input No. 1	Peak/top value	-32728 to 32767 (8000 to FFFF hex, 0000 to 7FFF hex)	The peak or top value is stored according to the scaling set in the DM area.	×		Year and month of final adjustment date	0001 to 9912 (BCD)	
p+17	00 to 15		Bottom/valley value	-32728 to 32767 (8000 to FFFF hex, 0000 to 7FFF hex)	The bottom or valley value is stored according to the scaling set in the DM area.		Input No. 3	Day of final adjustment date	0100 to 3100 (BCD)	
p+18	00 to 15	Input No. 2	Peak/top value	-32728 to 32767 (8000 to FFFF hex, 0000 to 7FFF hex)	Same as for input No. 1.			Year and month of final adjustment date	0001 to 9912 (BCD)	
p+19	00 to 15		Bottom/valley value				Input No. 4	Day of final adjustment date	0100 to 3100 (BCD)	
p+20	00 to 15	Input No. 3	Peak/top value					Year and month of final adjustment date	0001 to 9912 (BCD)	
p+21	00		Bottom/valley value				Input No. 1	Valley detection timing flag	0, 1	Turns ON when a valley is detected by the valley hold function and turns OFF after a cycle.
	01							Top detection timing flag	0, 1	Turns ON when a top is detected by the top hold function and turns OFF after a cycle.
	02						Input No. 2	Valley detection timing flag	0, 1	Same as for input No. 1.
	03							Top detection timing flag		
	04						Input No. 3	Valley detection timing flag		
	05							Top detection timing flag		
	06						Input No. 4	Valley detection timing flag		
	07							Top detection timing flag		
	08 to 15						Not used		0	-

Word	Bit	CS1W-PTS12				CJ1W-PH41U					
		Name		Data range	Description	Difference	Name			Data range	Description
p+22	00 to 15	Input No. 4	Peak/top value	-32728 to 32767 (8000 to FFFF hex, 0000 to 7FFF hex)	Same as for input No. 1.	×	Input No. 1	Lower	Peak/top value	-2147483648 to 2147483647 (80000000 to FFFFFFFF hex, 00000000 to 7FFFFFFF hex)	
p+23	00 to 15		Bottom/valley value					Upper			
p+24	00 to 15	Not used		0000	---	×		Lower	Bottom/valley value	-2147483648 to 2147483647 (80000000 to FFFFFFFF hex, 00000000 to 7FFFFFFF hex)	
p+25	00 to 15							Upper			
p+26	00 to 15						Input No. 2	Lower	Peak/top value	-2147483648 to 2147483647 (80000000 to FFFFFFFF hex, 00000000 to 7FFFFFFF hex)	Same as for input No. 1.
p+27	00 to 15							Upper			
p+28	00 to 15							Lower	Bottom/valley value		
p+29	00 to 15							Upper			
p+30	00 to 15						Input No. 3	Lower	Peak/top value		
p+31	00 to 15							Upper			
p+32	00 to 15							Lower	Bottom/valley value		
p+33	00 to 15							Upper			
p+34	00 to 15						Input No. 4	Lower	Peak/top value		
p+35	00 to 15	-		-	-	×		Upper			
p+36	00 to 15							Lower	Bottom/valley value		
p+37	00 to 15							Upper			
p+38	00 to 15						Input No. 1	Lower	Integral value	-2147483648 to 2147483647 (80000000 to FFFFFFFF hex, 00000000 to 7FFFFFFF hex)	The integral value for the process value is stored according to the scaling set in the DM area.
p+39	00 to 15							Upper			
p+40	00 to 15						Input No. 2	Lower	Integral value		
p+41	00 to 15							Upper			
p+42	00 to 15						Input No. 3	Lower	Integral value		
p+43	00 to 15							Upper			
p+44	00 to 15						Input No. 4	Lower	Integral value		
p+45	00 to 15							Upper			

Difference: Enhanced (◎), Equivalent (○), Degraded (△), or Incompatible feature (×)

(4) Differences in wiring and terminal arrangement

CS1W-PTS12	CJ1W-PH41U
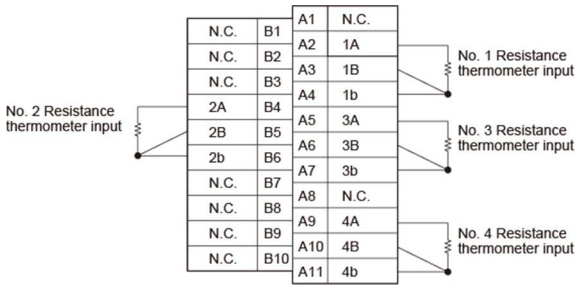	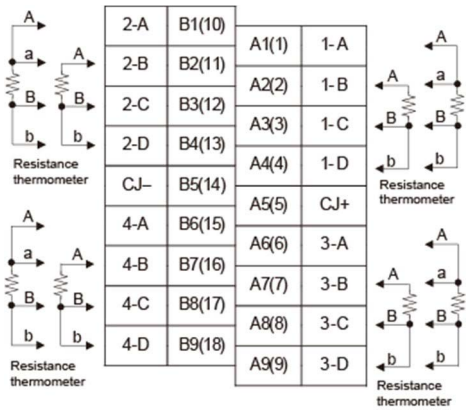

Reference manuals

CS1W-PTS12: *CS/CJ-series Analog I/O Units Operation Manual* (Cat. No. W368)

CJ1W-PH41U: *CS/CJ-series Analog I/O Units Operation Manual* (Cat. No. W368)

Appendix 6.14. CS1W-PTS52

(1) Selection of a replacement model and notes for replacement

Replacement model	Notes and restrictions
CJ1W-PTS52	● The temperature sensor type setting changes from selectable per point to common for all points. ● Different in the DM areas. ● The CIO areas remain the same. ● Different in the terminal block, terminal arrangement, and wiring.

(2) Differences in functions and capabilities

Item		CS1W-PTS52	CJ1W-PTS52	
		Specifications	Difference	Specifications
Number of inputs		4	○	4
Temperature sensor type		Pt100 (JIS, IEC), JPt100 The sensor type can be set for each input.	△	Pt100 (JIS, IEC), JPt100 The sensor type is common for all inputs.
Data storage in the CIO area		The actual process data in the input range is stored in four digits hexadecimal (binary or BCD values) in the allocated words in the CIO area.	○	The actual process data in the input range is stored in four digits hexadecimal (binary or BCD values) in the allocated words in the CIO area.
Accuracy (25ºC)		・ ±0.3% of PV or ±0.8ºC, whichever is greater, ±1 digit max. (±0.3% of PV or ±1.6ºF, whichever is greater, ±1 digit max.) ・ PV: Process value data	○	・ ±0.3% of PV or ±0.8ºC, whichever is greater, ±1 digit max. (±0.3% of PV or ±1.6ºF, whichever is greater, ±1 digit max.) ・ PV: Process value data
Temperature characteristics		Refer to *Temperature characteristics according to resistance thermometer type, (2)-2*.	○	Refer to *Temperature characteristics according to resistance thermometer type, (2)-2*.
Sensing method		3-wire	○	3-wire
Influence of lead wire resistance		0.4ºC/Ω max.	○	0.4ºC/Ω max.
Conversion period		250 ms/4 points	○	250 ms/4 points
Warm-up period		10 minutes	○	10 minutes
Maximum time to store data in CPU Unit		Conversion period + one CPU Unit cycle	○	Conversion period + one CPU Unit cycle
Sensor error detection		・ Detects sensor error at each input and turns ON the sensor error flag. ・ Burnout detection time: Approx. 0.5 s max. ・ The process value overrange direction for when a sensor error is detected can be specified. (High: Set input range + 20 digits; Low: Set input range - 20 digits)	○	・ Detects sensor error at each input and turns ON the sensor error flag. ・ Burnout detection time: Approx. 0.5 s max. ・ The process value overrange direction for when a sensor error is detected can be specified. (High: Set input range + 20 digits; Low: Set input range - 20 digits)
Functions	Process value alarm	・ Process value 2-point alarm (L, H), alarm hysteresis, and ON-delay timer (0 to 60 s) are available. ・ External alarm output: One per input (H or L).	○	・ Process value 2-point alarm (L, H), alarm hysteresis, and ON-delay timer (0 to 60 s) are available. ・ External alarm output: One per input (H or L).
	External alarm output	NPN output (with short-circuit protection) ・ External power supply voltage: 20.4 to 26.4 VDC ・ Max. switching capacity: 100 mA (for one output) ・ Leakage current: 0.3 mA max. ・ Residual voltage: 3 V max.	○	NPN output (with short-circuit protection) ・ External power supply voltage: 20.4 to 26.4 VDC ・ Max. switching capacity: 100 mA (for one output) ・ Leakage current: 0.3 mA max. ・ Residual voltage: 3 V max.
Isolation		・ Between inputs and PLC signals: Transformer for power supply and photocoupler for signals ・ Between inputs: Transformer for power supply and photocoupler for signals	○	・ Between inputs and PLC signals: Transformer for power supply and photocoupler for signals ・ Between inputs: Transformer for power supply and photocoupler for signals

Item	CS1W-PTS52	CJ1W-PTS52	
	Specifications	Difference	Specifications
Insulation resistance	20 MΩ min. (500 VDC with an insulation resistance tester) ・ Between all output and NC terminals and external AC terminals (Power Supply Unit) ・ Between all input terminals and external AC terminals (Power Supply Unit) ・ Between all input terminals and all output terminals ・ Between all external DC terminals (input, output, and NC terminals) and FG plate ・ Between all input and output terminals and all NC terminals	○	20 MΩ min. (500 VDC with an insulation resistance tester) ・ Between all output and NC terminals and external AC terminals (Power Supply Unit) ・ Between all input terminals and external AC terminals (Power Supply Unit) ・ Between all input terminals and all output terminals ・ Between all external DC terminals (input, output, and NC terminals) and FG plate ・ Between all input and output terminals and all NC terminals
Dielectric strength	・ Between all output and NC terminals and external AC terminals (Power Supply Unit) 2,000 VAC, 50/60 Hz 1 min., detection current: 1 mA ・ Between all input terminals and external AC terminals (Power Supply Unit) ・ Between all input terminals and all output terminals ・ Between all external DC terminals (input, output, and NC terminals) and FG plate 1,000 VAC, 50/60 Hz 1 min., detection current: 1 mA ・ Between all channels 500 VAC, 50/60 Hz 1 min., detection current: 1 mA	○	・ Between all output and NC terminals and external AC terminals (Power Supply Unit) 2,000 VAC, 50/60 Hz 1 min., detection current: 1 mA ・ Between all input terminals and external AC terminals (Power Supply Unit) ・ Between all input terminals and all output terminals ・ Between all external DC terminals (input, output, and NC terminals) and FG plate 1,000 VAC, 50/60 Hz 1 min., detection current: 1 mA ・ Between all channels 500 VAC, 50/60 Hz 1 min., detection current: 1 mA

Difference: Enhanced (◎), Equivalent (○), Degraded (△), or Incompatible feature (×)

(2)-1 Sensor types and input ranges

No difference

(2)-2 Temperature characteristics according to resistance thermometer type

Resistance thermometer	Temperature range	Set value error when ambient temperature changes by 1ºC
Pt100	-200 to 200ºC	±0.06ºC
	200 to 650ºC	285 ppm of PV
JPt100	-200 to 200ºC	±0.06ºC
	200 to 650ºC	285 ppm of PV

(3) Differences in memory area allocations

■ DM Areas

・The area allocations change. If they are programmed, replace them by referring to the manual.
Below are the major differences.

<CS1W-PTS52>

DM area address				Data range		Default	Data content
Input No. 1	Input No. 2	Input No. 3	Input No. 4	Decimal	Hexadecimal		
m+19	m+23	m+27	m+31	0, 1	0000, 0001 hex	0	● Input type setting 0: Pt100, 1: JPt100

<CJ1W-PTS52>

DM area address				Data range		Default	Data content
Input No. 1	Input No. 2	Input No. 3	Input No. 4	Decimal	Hexadecimal		
m+19				0, 1	0000, 0001 hex	0	● Input type setting 0: Pt100, 1: JPt100

■ CIO Areas

The CIO areas remain the same.

(4) Differences in wiring and terminal arrangement

CS1W-PTS52	CJ1W-PTS52
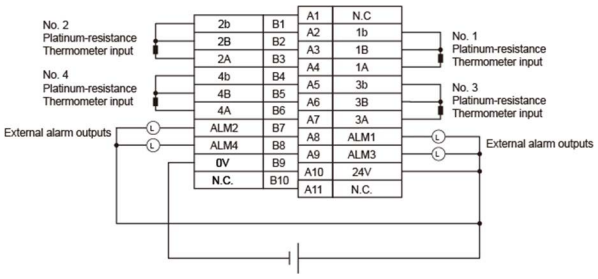	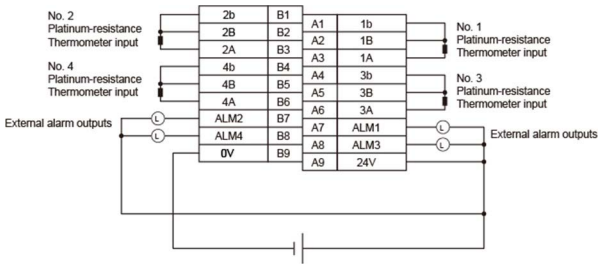

Reference manuals

CS1W-PTS52: *CS/CJ-series Analog I/O Units Operation Manual* (Cat. No. W368)

CJ1W-PTS52: *CS/CJ-series Analog I/O Units Operation Manual* (Cat. No. W368)

Appendix 6.15. CS1W-PTS56

(1) Selection of a replacement model and notes for replacement

Replacement model	Notes and restrictions
CJ1W-PTS52	● The number of input points changes from 8 to 4. ● Accordingly, the number of units changes from 1 to 2. ● A Unit number will be allocated to the increased Unit, which will have a memory area address corresponding to the allocated Unit number. ● The temperature sensor type setting changes from selectable per point to common for all points. ● External alarm output will be provided. ● Different in the DM areas. ● Expansion setting area allocations for process value alarms are not supported. ● Different in the CIO areas. ● Different in the terminal block, terminal arrangement, and wiring.

(2) Differences in functions and capabilities

Item		CS1W-PTS56	CJ1W-PTS52	
		Specifications	Difference	Specifications
Number of inputs		8	×	4
Temperature sensor type		Pt100 (JIS, IEC), JPt100 The sensor type can be set for each input.	△	Pt100 (JIS, IEC), JPt100 The sensor type is common for all inputs.
Data storage in the CIO area		The actual process data in the input range is stored in four digits hexadecimal (binary or BCD values) in the allocated words in the CIO area.	○	The actual process data in the input range is stored in four digits hexadecimal (binary or BCD values) in the allocated words in the CIO area.
Accuracy (25ºC)		・ ±0.3% of PV or ±0.8ºC, whichever is greater, ±1 digit max. (±0.3% of PV or ±1.6ºF, whichever is greater, ±1 digit max.) ・ PV: Process value data	○	・ ±0.3% of PV or ±0.8ºC, whichever is greater, ±1 digit max. (±0.3% of PV or ±1.6ºF, whichever is greater, ±1 digit max.) ・ PV: Process value data
Temperature characteristics		Refer to *Temperature characteristics according to resistance thermometer type, (2)-2.*	○	Refer to *Temperature characteristics according to resistance thermometer type, (2)-2.*
Sensing method		3-wire	○	3-wire
Influence of lead wire resistance		0.4ºC/Ω max.	○	0.4ºC/Ω max.
Warm-up period		10 minutes	○	10 minutes
Conversion period		250 ms/8 points	△	250 ms/4 points
Maximum time to store data in CPU Unit		Conversion period + one CPU Unit cycle	○	Conversion period + one CPU Unit cycle
Input error detection		・ Detects sensor error at each input and turns ON the sensor error flag. ・ Burnout detection time: Approx. 0.5 s max. ・ The process value overrange direction for when a sensor error is detected can be specified. (High: Set input range + 20 digits; Low: Set input range - 20 digits)	○	・ Detects sensor error at each input and turns ON the sensor error flag. ・ Burnout detection time: Approx. 0.5 s max. ・ The process value overrange direction for when a sensor error is detected can be specified. (High: Set input range + 20 digits; Low: Set input range - 20 digits)
Functions	Process value alarm	・ Process value 2-point alarm (L, H), alarm hysteresis, and ON-delay timer (0 to 60 s) are available. ・ Two alarms per input (L, H) can be output to addresses in the CIO Area specified in the expansion setting area.	△	・ Process value 2-point alarm (L, H), alarm hysteresis, and ON-delay timer (0 to 60 s) are available. ・ External alarm output: One per input (H or L).
	External alarm output	-	◎	NPN output (with short-circuit protection) ・ External power supply voltage: 20.4 to 26.4 VDC ・ Max. switching capacity: 100 mA (for one output) ・ Leakage current: 0.3 mA max. ・ Residual voltage: 3 V max.

Item	CS1W-PTS56	CJ1W-PTS52	
	Specifications	Difference	Specifications
Isolation	・ Between inputs and PLC signals: Transformer for power supply and photocoupler for signals ・ Between inputs: Transformer for power supply and photocoupler for signals	○	・ Between inputs and PLC signals: Transformer for power supply and photocoupler for signals ・ Between inputs: Transformer for power supply and photocoupler for signals
Insulation resistance	20 MΩ min. (500 VDC with an insulation resistance tester) ・ Between all input terminals and external AC terminals (Power Supply Unit) ・ Between all input terminals and FG plate	◎	20 MΩ min. (500 VDC with an insulation resistance tester) ・ Between all output and NC terminals and external AC terminals (Power Supply Unit) ・ Between all input terminals and external AC terminals (Power Supply Unit) ・ Between all input terminals and all output terminals ・ Between all external DC terminals (input, output, and NC terminals) and FG plate ・ Between all input and output terminals and all NC terminals
Dielectric strength	・ Between all input terminals and external AC terminals (Power Supply Unit) ・ Between all input terminals and FG plate 1,000 VAC, 50/60 Hz 1 min., detection current: 1 mA ・ Between all channels 500 VAC, 50/60 Hz 1 min., detection current: 1 mA	◎	・ Between all output and NC terminals and external AC terminals (Power Supply Unit) 2,000 VAC, 50/60 Hz 1 min., detection current: 1 mA ・ Between all input terminals and external AC terminals (Power Supply Unit) ・ Between all input terminals and all output terminals ・ Between all external DC terminals (input, output, and NC terminals) and FG plate 1,000 VAC, 50/60 Hz 1 min., detection current: 1 mA ・ Between all channels 500 VAC, 50/60 Hz 1 min., detection current: 1 mA

Difference: Enhanced (◎), Equivalent (○), Degraded (△), or Incompatible feature (×)

(2)-1 Sensor types and input ranges

No difference

(2)-2 Temperature characteristics according to resistance thermometer type

Resistance thermometer	Temperature range	Set value error when ambient temperature changes by 1ºC
Pt100	-200 to 200ºC	±0.06ºC
	200 to 650ºC	285 ppm of PV
JPt100	-200 to 200ºC	±0.06ºC
	200 to 650ºC	285 ppm of PV

(3) Differences in memory area allocations

■ DM Areas

・ The area allocations change. If they are programmed, replace them by referring to the manual.
Below are the major differences.

<CS1W-PTS56>

DM area address								Data range		Default	Data content
Input No. 1	Input No. 2	Input No. 3	Input No. 4	Input No. 5	Input No. 6	Input No. 7	Input No. 8	Decimal	Hexadecimal		
m+1								0 to 59	0000 to 003B hex	0 (0000 hex)	● Display parameter Data range error address
m+4	m+8	m+12	m+16	m+20	m+24	m+28	m+32	0 to 32000	0000 to 7D00 hex	10000 (2710 hex)	● Span adjustment value Set value x 0.0001
m+35	m+38	m+41	m+44	m+47	m+50	m+53	m+56	0, 1, 15	0000, 0001, 000F hex	0	● Input type setting 0: Pt100, 1: JPt100, F: Not used
-	-	-	-	-	-	-	-	-	-	-	● External alarm output mode
-	-	-	-	-	-	-	-	-	-	-	● Span adjustment mode
m+59								0, 1	0000, 0001 hex	0 (0000 hex)	● Expansion setting area enable 0: Disabled, 1: Enabled
m+60								0 to 6143	0000 to 17FF hex	0 (0000 hex)	● Expansion setting area address CIO area (fixed) Number of words

<CJ1W-PTS52>

DM area address				Data range		Default	Data content
Input No. 1	Input No. 2	Input No. 3	Input No. 4	Decimal	Hexadecimal		
m+1				0 to 31	0000 to 001F hex	0 (0000 hex)	● Display parameter Data range error address
m+4	m+8	m+12	m+16	0 to 9999	0000 to 270F hex	1000 (03EB hex)	● Span adjustment value m+32 contains 0: Set value x 0.001
				0 to 32000	0000 to 7D00 hex	10000 (2710 hex)	m+32 contains 1: Set value x 0.0001
m+19				0, 1	0000, 0001 hex	0	● Input type setting 0: Pt100, 1: JPt100
m+20	m+23	m+26	m+29	0, 1	0000, 0001 hex	0 (0000 hex)	● External alarm output mode Select either high limit or low limit alarm output. 0: High limit alarm; 1: Low limit alarm
m+32				0, 1	0000, 0001 hex	1	● Span adjustment mode 0: 1/1000, 1: 1/10000
-				-	-	-	● Expansion setting area enable
-				-	-	-	● Expansion setting area address

■ Expansion Setting Areas
<CS1W-PTS56 only>
* CJ1W-PTS52 does not support specifying an expansion setting area.
First word: word o. (o = address specified in word m+60 in the DM area)
Direction: This Unit → CPU Unit

Word	Bit	CS1W-PTS56			
		Name		Data range	Description
o	00	Input No. 1	Process value L (low limit) alarm	0, 1	0: Process value > Set value 1: Process value ≤ Set value
	01		Process value H (high limit) alarm	0, 1	0: Process value < Set value 1: Process value ≥ Set value
	02	Input No. 2	Process value L (low limit) alarm	0, 1	Same as for input No. 1.
	03		Process value H (high limit) alarm		
	04	Input No. 3	Process value L (low limit) alarm		
	05		Process value H (high limit) alarm		
	06	Input No. 4	Process value L (low limit) alarm		
	07		Process value H (high limit) alarm		
	08	Input No. 5	Process value L (low limit) alarm		
	09		Process value H (high limit) alarm		
	10	Input No. 6	Process value L (low limit) alarm		
	11		Process value H (high limit) alarm		
	12	Input No. 7	Process value L (low limit) alarm		
	13		Process value H (high limit) alarm		
	14	Input No. 8	Process value L (low limit) alarm		
	15		Process value H (high limit) alarm		

■ CIO Areas
Direction: This Unit → CPU Unit

Word	Bit	CS1W-PTS56				CJ1W-PTS52				
		Name		Data range	Description	Difference	Name		Data range	Description
n	00	Input No. 1	Process value L (low limit) alarm	0, 1	0: Process value > Set value 1: Process value ≤ Set value	○	Input No. 1	Process value L (low limit) alarm	0, 1	0: Process value > Set value 1: Process value ≤ Set value
	01		Process value H (high limit) alarm	0, 1	0: Process value < Set value 1: Process value ≥ Set value			Process value H (high limit) alarm	0, 1	0: Process value < Set value 1: Process value ≥ Set value
	02	Input No. 2	Process value L (low limit) alarm	0, 1	Same as for input No. 1.	○	Input No. 2	Process value L (low limit) alarm	0, 1	Same as for input No. 1.
	03		Process value H (high limit) alarm					Process value H (high limit) alarm		
	04	Input No. 3	Process value L (low limit) alarm			○	Input No. 3	Process value L (low limit) alarm		
	05		Process value H (high limit) alarm					Process value H (high limit) alarm		

Word	Bit	CS1W-PTS56				CJ1W-PTS52				
		Name		Data range	Description	Difference	Name		Data range	Description
	06	Input No. 4	Process value L (low limit) alarm			○	Input No. 4	Process value L (low limit) alarm		
	07		Process value H (high limit) alarm					Process value H (high limit) alarm		
	08	Input No. 5	Process value L (low limit) alarm			×	Not used		0	---
	09		Process value H (high limit) alarm							
	10	Input No. 6	Process value L (low limit) alarm							
	11		Process value H (high limit) alarm							
	12	Input No. 7	Process value L (low limit) alarm							
	13		Process value H (high limit) alarm							
	14	Input No. 8	Process value L (low limit) alarm							
	15		Process value H (high limit) alarm							
n+1	00 to 15	Input No. 1	Process value	Depends on type of input.	Stores data in the data range specified for the input type ±20 digits.	○	Input No. 1	Process value	Depends on type of input.	Stores data in the data range specified for the input type ±20 digits.
n+2	00 to 15	Input No. 2				○	Input No. 2			
n+3	00 to 15	Input No. 3				○	Input No. 3			
n+4	00 to 15	Input No. 4				○	Input No. 4			
n+5	00 to 15	Input No. 5				×	Not used		0000	---
n+6	00 to 15	Input No. 6								
n+7	00 to 15	Input No. 7								
n+8	00 to 15	Input No. 8								
n+9	00	Input No. 1	Input error	0, 1	0: Normal 1: Error	○	Input No. 1	Sensor error	0, 1	0: Normal 1: Error
	01	Input No. 2				○	Input No. 2	Sensor error	0, 1	
	02	Input No. 3				○	Input No. 3	Sensor error	0, 1	
	03	Input No. 4				○	Input No. 4	Sensor error	0, 1	

Word	Bit	CS1W-PTS56			CJ1W-PTS52			
		Name	Data range	Description	Difference	Name	Data range	Description
	04	Input No. 5			×	Not used	0	---
	05	Input No. 6						
	06	Input No. 7						
	07	Input No. 8						
	8 to 14	Not used	0	---	○	Not used	0	---
	15	Conversion data enabled flag	0, 1	0: Data disabled 1: Data enabled		Conversion data enabled flag	0, 1	0: Data disabled 1: Data enabled

Difference: Enhanced (◎), Equivalent (○), Degraded (△), or Incompatible feature (×)

(4) Differences in wiring and terminal arrangement

CS1W-PTS56	CJ1W-PTS52
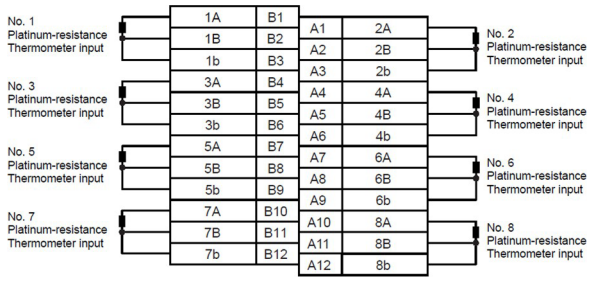	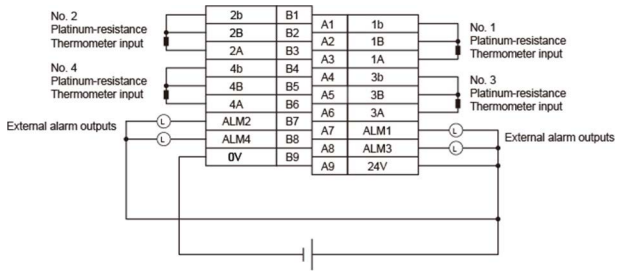

Reference manuals

CS1W-PTS56: *CS/CJ-series Analog I/O Units Operation Manual* (Cat. No. W368)

CJ1W-PTS52: *CS/CJ-series Analog I/O Units Operation Manual* (Cat. No. W368)

Appendix 6.16. CS1W-PTS02

(1) Selection of a replacement model and notes for replacement

Replacement model	Notes and restrictions
CJ1W-PH41U	● Different in the DM areas. ● Additional expansion setting areas will be provided. ● Different in the CIO areas. ● Additional expansion control/monitor areas will be provided. ● Different in the terminal block, terminal arrangement, and wiring.

(2) Differences in functions and capabilities

Item	CS1W-PTS02	CJ1W-PH41U	
	Specifications	Difference	Specifications
Number of temperature sensor inputs	4	○	4
Temperature sensor type	Pt100 (JIS, IEC) or JPt100 Sensor type, input range, and scaling to industrial units are separate for each of the 4 inputs.	◎	・ Pt100 (JIS, IEC 3-wire), JPt100 (3-wire), Pt1000 (3-wire), Pt100 (JIS, IEC 4-wire) * Pt1000 (3-wire) is supported for 1/256,000 resolution only. ・ The input type, input range, and scaling can be set for individual inputs.
Input range	The input range can be set within any of the measurable input ranges shown in (2)-1-1 (variable input range).	○	- (Refer to *(2)-1-1 Measurable input ranges*)
Scaling	・ Data to be stored in the allocated words in the CIO area must be scaled (with the minimum and maximum values set by user) (4 inputs set separately). ・ For example, data can be stored at 0% to 100%.	△	・ Data to be stored in the allocated words in the CIO area must be scaled (with user-set minimum and maximum values for data and offsets). The inputs are set individually. ・ For example, data can be converted at 0% to 100%.
Data storage in the CIO area	・ The value derived from carrying out the following processing in order on the actual process data in the input range is stored in four digits hexadecimal (binary values) in the allocated words in the CIO Area. ・ 1) Mean value processing → 2) Scaling → 3) Zero/span adjustment → 4) Output limits	△	・ The value derived from carrying out the following processing in order on the actual process data in the input range is stored in four digits hexadecimal (binary values) in the allocated words. ・ 1) Mean value processing → 2) Scaling → 3) Zero/span adjustment → 4) Output limits → 5) Offset compensation → 6) Output limits
Accuracy (25ºC)	・ ±0.1% (of internal range full span) or ±0.1ºC, whichever is greater ・ As shown in the following equation, the accuracy depends on the ratio of the selected internal range (0 to 4) span to the set input range span. ・ Accuracy = ±0.1% x Internal range span (electromotive force conversion) / Set input range span (electromotive force conversion) or ±0.1ºC, whichever is greater	△	±0.05% (The accuracy depends on the input type and the measured temperature. For details, refer to *(2)-1-2 Accuracy by resistance thermometer input type and measured temperature*.)
Temperature coefficient	±0.015%/ºC, for any of internal range numbers 0 to 4.	△	The temperature coefficient depends on the input type and the measured temperature. For details, refer to *(2)-1-2 Accuracy by resistance thermometer input type and measured temperature*.
Resolution	・ 1/4,096 (of internal range full span) As shown in the following equation, the accuracy depends on the ratio of the selected internal range (0 to 4) span to the set input range span. ・ Resolution = [1/4096] x [Internal range span (electromotive force conversion)] / [Set input range span (electromotive force conversion)]	◎	1/256,000, 1/64,000
Sensing method	3-wire	◎	3-wire, 4-wire

Item		CS1W-PTS02	CJ1W-PH41U	
		Specifications	Difference	Specifications
Allowable lead wire resistance		20 Ω max. per wire	×	-
Influence of lead wire resistance		-	◎	0.06ºC/Ω (20 Ω max.) (3-wire) 0.006ºC/Ω (20 Ω max.) (4-wire)
Input detection current		0.25 mA	△	Approx. 0.21 mA (3-wire), approx. 0.42 mA (4-wire)
Warm-up period		10 minutes	△	30 minutes
Response time		0.5 s (travel time from input 0% to 90%, for step input)	◎	・ 1/256,000 resolution: 180 ms max. (travel time from input 0% to 90%, for step input and with moving average for 1 sample) ・ 1/64,000 resolution: 100 ms max. (travel time from input 0% to 90%, for step input and with moving average for 4 samples)
Conversion period		100 ms/4 points	◎	60 ms/4 points (1/256,000 resolution) 10 ms/4 points (1/64,000 resolution)
Maximum time to store data in CPU Unit		Conversion period + one CPU Unit cycle	○	Conversion period + one CPU Unit cycle
Disconnection detection		・ Detects disconnections at each input and turns ON the disconnection detection flag. ・ Burnout detection time: Approx. 1 s max. ・ The process value overrange direction for when a disconnection occurs can be specified. (High: +115% of set input range; low: -15% of set input range)	△	・ Input error flag turns ON when a disconnection occurs or when 115% or -15% of the measurable input range is exceeded. ・ The process value overrange direction for when a disconnection occurs can be specified. (High: 115% of set input range; low: -15% of set input range) ・ Disconnection detection time: Approx. 5 s max. (4-wire Pt100) Approx. 0.5 s max. (except for 4-wire Pt100)
Functions	Mean value processing (input filter)	Calculates the moving average for the specified number of process values (1 to 16), and stores that value in the CIO Area as the process value.	◎	Calculates the moving average for the specified number of process values (1 to 128), and stores that value in the CIO Area as the process value.
	Process value alarm	Process value 4-point alarm (HH, H, L, LL), alarm hysteresis, and ON-delay timer (0 to 60 s) are available.	○	Process value 4-point alarm (LL, L, H, HH), alarm hysteresis, and ON/OFF-delay timer (0 to 60 s) are available.
	Rate-of-change calculation	Calculates the amount of change per comparison time interval (1 to 16 s).	△	Calculates the amount of change per process value comparison time interval (Either 1 to 16 s or the conversion period can be set.)
	Rate-of-change alarm	Rate-of-change 2-point alarm (H, L), alarm hysteresis (shared with process value alarm), and ON-delay timer (0 to 60 s, shared with process value alarm) are available.	○	Rate-of-change 2-point alarm (L, H), alarm hysteresis, and ON/OFF-delay timer (0 to 60 s, shared with process value alarm) are available.
	Adjustment period control	-	◎	When zero/span adjustment is executed, the date is internally recorded at the Unit. When the preset zero/span adjustment period and number of days notice have elapsed (allocated in expansion setting area), this function turns ON a warning flag to give notice that it is time for readjustment.
	Peak and bottom detection	-	◎	This function detects the maximum (peak) and minimum (bottom) process values, from when the hold start bit (output) allocated to the expansion control/monitor area turns ON until it turns OFF, and stores them in the expansion control/monitor area.

Item		CS1W-PTS02	CJ1W-PH41U	
		Specifications	Difference	Specifications
	Top and valley detection	-	◎	This function detects the top and valley values for process values, from when the hold start bit (output) allocated to the expansion control/monitor area turns ON until it turns OFF, and stores them in the expansion control/monitor area.
	Integral value calculation	-	◎	・This function calculates the process value's time integral. ・The integral value is calculated and the result is output to the expansion control/monitor area when the integral value calculation start bit in the expansion control/monitor area is turned ON.
	Resistance thermometer input compensation	-	◎	・Compensation is enabled for a connected resistance thermometer by setting the resistance for 23ºC. ・Note: This function is supported only for resistance thermometer inputs.
Isolation		Transformer isolation between channels and between input terminals and PLC signals	△	・Between inputs and PLC signals: Transformer for power supply and digital isolator for signals ・Between inputs: Transformer for power supply and digital isolator for signals
Insulation resistance		Between all channels: 20 MΩ (500 VDC with an insulation resistance tester)	○	Between all channels: 20 MΩ (500 VDC with an insulation resistance tester)
Dielectric strength		Between all channels: 1,000 VAC, 50/60 Hz, 1 min, leakage current 10 mA max.	△	Between all channels: 500 VAC, 50/60 Hz, 1 min, leakage current 10 mA max.

Difference: Enhanced (◎), Equivalent (○), Degraded (△), or Incompatible feature (×)

(2)-1 Sensor types and input ranges

(2)-1-1 Measurable input ranges

Sensor type	CS1W-PTS02		CJ1W-PH41U		
	DM area setting	Measurable input range	Difference	DM area setting	Measurable input range
Pt100 (3-wire)	0	-200 to 850ºC	○	0	-200 to 850ºC
JPt100 (3-wire)	1	-200 to 500ºC	○	3	-200 to 500ºC
Pt1000 (3-wire)	-	-	◎	7	-200 to 850ºC
Pt100 (4-wire)	-	-	◎	9	-200 to 850ºC
				10	0 to 50ºC

Difference: Enhanced (◎), Equivalent (○), Degraded (△), or Incompatible feature (×)

(2)-1-2 Accuracy by resistance thermometer input type and measured temperature

Input classification		Measured temperature (ºC)	Standard accuracy ºC (%)	Temperature coefficient ºC/ºC (ppm/ºC)
Temperature sensor type	Temperature range (ºC)			
Pt100 (3-wire)	-200.00 to 850.00	-200.00 to -50.00	±0.5ºC (±0.05%)	±0.08ºC/ºC (±78 ppm/ºC)
		-50.00 to 150.00	±0.21ºC (±0.02%)	±0.03ºC/ºC (±29 ppm/ºC)
		150.00 to 850.00	±0.5ºC (±0.05%)	±0.08ºC/ºC (±78 ppm/ºC)
JPt100 (3-wire)	-200.00 to 500.00	Same as on the left	±0.4ºC (±0.05%)	±0.07ºC/ºC (±96 ppm/ºC)
Pt1000 (3-wire)	-200.00 to 850.00	Same as on the left	±0.5ºC (±0.05%)	±0.09ºC/ºC (±85 ppm/ºC)
Pt100 (4-wire)	-200.00 to 850.00	Same as on the left	±0.5ºC (±0.05%)	±0.02ºC/ºC (±17 ppm/ºC)
	0.000 to 50.000	Same as on the left	±0.025ºC (±0.05%)	±0.005ºC/ºC (±90 ppm/ºC)

(2)-1-3 Internal ranges

<CS1W-PTS02 only>

* CJ1W-PH41U does not support specifying an internal range.

Internal range number	Temperature range	Internal range span
0	-200 to 850ºC	1,050ºC
1	-200 to 438ºC	638ºC
2	-200 to 211ºC	411ºC
3	-100 to 104ºC	204ºC
4	-51 to 52ºC	103ºC

(3) Differences in memory area allocations

■ DM Areas

・ The area allocations change. If they are programmed, replace them by referring to the manual.

Below are the major differences.

<CS1W-PTS02>

DM area address				Data range		Default	Data content
Input No. 1	Input No. 2	Input No. 3	Input No. 4	Decimal	Hexadecimal		
m+2	m+10	m+18	m+26	-32768 to 32767	8000 to FFFF hex 0000 to 7FFF hex	4200 (1068 hex)	● Process value alarm settings Process value HH (high high limit) alarm setting (Set as a process value scaling value.)
m+3	m+11	m+19	m+27	-32768 to 32767	8000 to FFFF hex 0000 to 7FFF hex	4000 (0FA0 hex)	Process value H (high limit) alarm setting (Set as a process value scaling value.)
m+4	m+12	m+20	m+28	-32768 to 32767	8000 to FFFF hex 0000 to 7FFF hex	0 (0000 hex)	Process value L (low limit) alarm setting (Set as a process value scaling value.)
m+5	m+13	m+21	m+29	-32768 to 32767	8000 to FFFF hex 0000 to 7FFF hex	-200 (FF38 hex)	Process value LL (low low limit) alarm setting (Set as a process value scaling value.)
m+6	m+14	m+22	m+30	-32768 to 32767	8000 to FFFF hex 0000 to 7FFF hex	4000 (0FA0 hex)	● Rate-of-change value alarm settings Rate-of-change value H (high limit) alarm setting (Set as a rate-of-change scaling value.)
m+7	m+15	m+23	m+31	-32768 to 32767	8000 to FFFF hex, 0000 to 7FFF hex	0 (0000 hex)	Rate-of-change value L (low limit) alarm setting (Set as a rate-of-change scaling value.)
m+8	m+16	m+24	m+32	0 to 32000	0000 to 7D00 hex	10000 (2710 hex)	● Zero/span adjustment Gain for span adjustment (set value x 0.0001%)
m+9	m+17	m+25	m+33	-32000 to 32000	8300 to FFFF hex 0000 to 7D00 hex	0 (0000 hex)	Zero adjustment value (Set as a process value scaling value.)
m+34	m+49	m+64	m+79	0 to 3	0000 to 0003 hex	0 (0000 hex)	● Sensor type 0: Pt100, 1: JPt100, 2: Pt50, 3: Ni508.4
m+35	m+50	m+65	m+80	-32000 to 32000	8300 to FFFF hex 0000 to 7D00 hex	4000 (0FA0 hex)	● Process value input range settings Maximum input signal value (set value x 0.1ºC/ºF)
m+36	m+51	m+66	m+81	-32000 to 32000	8300 to FFFF hex 0000 to 7D00 hex	0 (0000 hex)	Minimum input signal value (set value x 0.1ºC/ºF)
m+39	m+54	m+69	m+84	-32000 to 32000	8300 to FFFF hex 0000 to 7D00 hex	4000 (0FA0 hex)	● Process value scaling Value stored for maximum value in range (span)

DM area address				Data range		Default	Data content	
Input No. 1	Input No. 2	Input No. 3	Input No. 4	Decimal	Hexadecimal			
m+40	m+55	m+70	m+85	-32000 to 32000	8300 to FFFF hex 0000 to 7D00 hex	0 (0000 hex)	Value stored for minimum value in range (zero)	
m+41	m+56	m+71	m+86	0 to 32000	0000 to 7D00 hex	40 (0028 hex)	● Alarm supplementary functions Alarm hysteresis (Set as a process value scaling value.) (Shared with process value alarm and rate-of-change alarm.)	
m+42	m+57	m+72	m+87	0 to 60	0000 to 003C hex	0 (0000 hex)	Alarm ON-delay time (unit: s) (Shared with process value alarm and rate-of-change alarm.)	
m+43	m+58	m+73	m+88	-32000 to 32000	8300 to FFFF hex 0000 to 7D00 hex	4000 (0FA0 hex)	Rate-of-change range setting	● Rate-of-change function Maximum rate-of-change value (Set value industrial unit, comparison time interval)
m+44	m+59	m+74	m+89	-32000 to 32000	8300 to FFFF hex 0000 to 7D00 hex	-4000 (F060 hex)		Minimum rate-of-change value (Set value industrial unit, comparison time interval)
m+45	m+60	m+75	m+90	1 to 16	0001 to 0010 hex	1 (0001 hex)	Rate-of-change comparison time interval (unit: s)	
m+46	m+61	m+76	m+91	-32000 to 32000	8300 to FFFF hex 0000 to 7D00 hex	4000 (0FA0 hex)	Rate-of-change value scaling	Value stored for maximum value in range
m+47	m+62	m+77	m+92	-32000 to 32000	8300 to FFFF hex 0000 to 7D00 hex	-4000 (F060 hex)		Value stored for minimum value in range
m+48	m+63	m+78	m+93	1 to 128	0001 to 0080 hex	25 (0019 hex)	● Mean value processing function Number of process values for calculating moving average for mean value processing	
m+94	m+95	m+96	m+97	0 to 93	0000 to 005D hex	0 (0000 hex)	● Data range error address	

<CJ1W-PH41U>

DM area address				Data range		Default	Data content	
Input No. 1	Input No. 2	Input No. 3	Input No. 4	Decimal	Hexadecimal			
m+1				(*1)	(*1)	0 (0000 hex)	● Operation settings Bits 00 to 03: Resolution switch Bits 04 to 07: Process value data length	
m+2	m+10	m+18	m+26	-2147483648 to 2147483647	80000000 to FFFFFFFF hex, 00000000 to 7FFFFFFF hex	40000 (00009C40 hex)	Lower	● Process value alarm settings Process value H (high limit) alarm setting (Set as a process value scaling value.)
m+3	m+11	m+19	m+27				Upper	
m+4	m+12	m+20	m+28	-2147483648 to 2147483647	80000000 to FFFFFFFF hex, 00000000 to 7FFFFFFF hex	0 (00000000 hex)	Lower	Process value L (low limit) alarm setting (Set as a process value scaling value.)
m+5	m+13	m+21	m+29				Upper	
m+6	m+14	m+22	m+30	1 to 100000000	00000001 to 05F5E100 hex	10000000 (00989680 hex)	Lower	● Zero/span adjustment Gain for span adjustment (set value x 0.0000001(10-7))
m+7	m+15	m+23	m+31				Upper	
m+8	m+16	m+24	m+32	-2147483648 to 2147483647	80000000 to FFFFFFFF hex, 00000000 to 7FFFFFFF hex	0 (00000000 hex)	Lower	Zero adjustment value (Set as a process value scaling value.)
m+9	m+17	m+25	m+33				Upper	

DM area address				Data range		Default	Data content	
Input No. 1	Input No. 2	Input No. 3	Input No. 4	Decimal	Hexadecimal			
m+34	m+49	m+64	m+79	0 to 50	0 to 32 hex	36 (0024 hex)	● Input signal type ・When the resolution switch is set to 0 (1/256,000) 0: Pt100 (3-wire) 3: JPt100 (3-wire) 7: Pt1000 (3-wire) 9: Pt100 (4-wire) (1) 10: Pt100 (4-wire) (2) ・When the resolution switch is set to 1 (1/64,000) 0: Pt100 (3-wire) 3: JPt100 (3-wire) 9: Pt100 (4-wire) (1)	
m+35	m+50	m+65	m+80	-32000 to 32000	8300 to FFFF hex 0000 to 7D00 hex	10000 (2710 hex)	● Process value input range settings Maximum input signal value Set value x 0.1ºC for ºC Set value x 0.1ºF for ºF	
m+36	m+51	m+66	m+81	-32000 to 32000	8300 to FFFF hex 0000 to 7D00 hex	0 (0000 hex	Minimum input signal value Set value x 0.1ºC for ºC Set value x 0.1ºF for ºF	
m+39	m+54	m+69	m+84	- 2147483648 to 2147483647	80000000 to FFFFFFFF hex, 00000000 to 7FFFFFFF hex	10000 (00002710 hex)	Lower	● Process value scaling Maximum scaling value (value stored for maximum value in range (span))
m+40	m+55	m+70	m+85				Upper	
m+41	m+56	m+71	m+86	- 2147483648 to 2147483647	80000000 to FFFFFFFF hex, 00000000 to 7FFFFFFF hex	0 (00000000 hex)	Lower	Minimum scaling value (value stored for minimum value in range (zero))
m+42	m+57	m+72	m+87				Upper	
m+43	m+58	m+73	m+88	- 2147483648 to 2147483647	80000000 to FFFFFFFF hex, 00000000 to 7FFFFFFF hex	0 (0000000 hex)	Lower	Scaling offset
m+44	m+59	m+74	m+89				Upper	
m+45	m+60	m+75	m+90	0 to 32767	0000 to 7FFF hex	40 (0028 hex)	● Alarm supplementary functions Alarm hysteresis (Set as a process value scaling value.) (Shared with process value alarm and rate-of-change alarm.)	
m+46	m+61	m+76	m+91	0 to 60	0000 to 003C hex	0 (0000 hex)	Alarm ON-delay time (unit: s) (Shared with process value alarm and rate-of-change alarm.)	
m+47	m+62	m+77	m+92	0 to 60	0000 to 003C hex	0 (0000 hex)	Alarm OFF-delay time (unit: s) (Shared with process value alarm and rate-of-change alarm.)	
m+48	m+63	m+78	m+93	0 to 128	0000 to 0080 hex	0 (0000 hex)	● Mean value processing function Number of process values for calculating moving average for mean value processing 0: 4 values for a resolution of 1/256,000, 25 values for a resolution of 1/64,000 or 1/16,000 1 to 128: Number of process values	
m+94	m+95	m+96	m+97	0 to 99 100 to 1XX	0000 to 0063 hex, 0064 to 0XXX hex	0 (0000 hex)	Data range error address	

*1. The operation settings are as follows:

Addresses	Bit	Description	Setting
m+1	00 to 03	Resolution switch	0: 1/256,000 (conversion period: 60 ms) 1: 1/64,000 (conversion period: 10 ms) 2: 1/16,000 (conversion period: 5 ms)
	04 to 07	Process value data length (Sets the data length for the process value, rate of change, peak value, top value, bottom value, and valley value.)	0: 2 words (signed double word binary data) 1: 1 word (restricted to the following range: -32768 to 32767 (8000 to FFFF hex, 0000 to 7FFF hex).)

■ Expansion Setting Areas

<CJ1W-PH41U only>

* CS1W-PTS02 does not support specifying an expansion setting area.

First word: word o. (o = address specified in word m+99 in the area specified in word m+98 in the DM area)

Memory area address				Data range		Default	Data content	
Input No. 1	Input No. 2	Input No. 3	Input No. 4	Decimal	Hexadecimal			
o	o+8	o+16	o+24	-2147483648 to 2147483647	80000000 to FFFFFFFF hex, 00000000 to 7FFFFFFF hex	42000 (0000A410 hex)	Lower	● Process value alarm settings Process value HH (high high limit) alarm setting (Set as a process value scaling value.)
o+1	o+9	o+17	o+25				Upper	
o+2	o+10	o+18	o+26	-2147483648 to 2147483647	80000000 to FFFFFFFF hex, 00000000 to 7FFFFFFF hex	-2000 (FFFFF830 hex)	Lower	Process value LL (low low limit) alarm setting (Set as a process value scaling value.)
o+3	o+11	o+19	o+27				Upper	
o+4	o+12	o+20	o+28	-2147483648 to 2147483647	80000000 to FFFFFFFF hex, 00000000 to 7FFFFFFF hex	40000 (00009C40 hex)	Lower	● Rate-of-change value alarm settings Rate-of-change value H (high limit) alarm setting (Set as a rate-of-change scaling value.)
o+5	o+13	o+21	o+29				Upper	
o+6	o+14	o+22	o+30	-2147483648 to 2147483647	80000000 to FFFFFFFF hex, 00000000 to 7FFFFFFF hex	0 (00000000 hex)	Lower	Rate-of-change value L (low limit) alarm setting (Set as a rate-of-change scaling value.)
o+7	o+15	o+23	o+31				Upper	
o+32				0 to 5	0000 to 0005 hex	-	● Expansion control/monitor area settings Expansion control/monitor area allocation 0: Not used, 1: DM, 2: CIO, 3: W, 4: H, 5: EM	
o+33				0 to 32767	0000 to 7FFFF hex	-	First word of expansion control/monitor area	
o+34	o+48	o+62	o+76	0, 1	0000, 0001 hex	0 (0000 hex)	Square root calculations Square root extraction (Valid when max. scaling value ≥ minimum scaling value.) 0: Disable, 1: Enable	
o+35	o+49	o+63	o+77	-32000 to 32000	8300 to FFFF hex 0000 to 7D00 hex	10000 (2710 hex)	● Rate-of-change function Rate-of-change range setting Maximum rate-of-change value (Set value industrial unit, comparison time interval)	
o+36	o+50	o+64	o+78	-32000 to 32000	8300 to FFFF hex 0000 to 7D00 hex	-10000 (D810 hex)	Minimum rate-of-change value (Set value industrial unit, comparison time interval)	
o+37	o+51	o+65	o+79	1 to 16	0001 to 0010 hex	1 (0001 hex)	Rate-of-change comparison time interval* Bits 00 to 07: Comparison time Bits 08 to 15: Unit	

Memory area address				Data range		Default	Data content	
Input No. 1	Input No. 2	Input No. 3	Input No. 4	Decimal	Hexadecimal			
o+38	o+52	o+66	o+80	- 2147483648 to 2147483647	80000000 to FFFFFFFF hex, 00000000 to 7FFFFFFF hex	10000 (00002710 hex)	Lower	Rate-of-change value scaling Maximum rate-of-change scaling value (value stored for maximum value in range)
o+39	o+53	o+67	o+81				Upper	
o+40	o+54	o+68	o+82	- 2147483648 to 2147483647	80000000 to FFFFFFFF hex, 00000000 to 7FFFFFFF hex	-10000 (FFFFD810 hex)	Lower	Minimum rate-of-change scaling value (value stored for minimum value in range)
o+41	o+55	o+69	o+83				Upper	
o+42	o+56	o+70	o+84	0 to 32000	0000 to 7D00 hex	10000 (2710 hex)	● Zero/span adjustment supplementary function Span adjustment position (Set value x 0.01%, percentage of input span)	
o+43	o+57	o+71	o+85	-32000 to 32000	8300 to FFFF hex 0000 to 7D00 hex	0 (0000 hex)	Zero adjustment position (Set value x 0.01%, percentage of input span)	
o+44	o+58	o+72	o+86	0 to 9999	0000 to 270F hex	365 (016D hex)	Zero/span adjustment period (unit: days)	
o+45	o+59	o+73	o+87	0 to 9999	0000 to 270F hex	30 (001E hex)	Notice of days remaining (unit: days)	
o+46	o+60	o+74	o+88	0 to 32767	0000 to 7FFF hex	40 (0028 hex)	● Top and valley hold Hysteresis	
o+47	o+61	o+75	o+89	*	*	0 (0000 hex)	● Integral value calculation* Bits 00 to 07: Integer unit Bits 08 to 15: Integer coefficient	
o+90				*	*	0 (0000 hex)	● Resistance thermometer input compensation Resistance thermometer input compensation enable*	
o+91	o+93	o+95	o+97	- 2147483648 to 2147483647	80000000 to FFFFFFFF hex, 00000000 to 7FFFFFFF hex	1089585403 (40F1C0FB hex)	Lower	Reference resistance (resistance at 23ºC) (Set value x 0.0000001(10-7) Ω for Pt100 or JPt100, or set value x 0.000001(10-6) Ω for Pt1000)
o+92	o+94	o+96	o+98				Upper	
o+99				*	*	0 (0000 hex)	● Cold junction compensation method settings Cold junction compensation method*	

* The settings for the rate-of-change comparison time interval, integral value calculation, resistance thermometer compensation, and cold junction compensation method are as follows:

Addresses	Bit	Description	Setting	
o+37 o+51 o+65 o+79	00 to 07	Comparison time	Decimal	Hexadecimal
			1 to 16	0001 to 0010 hex
	08 to 15	Unit	0: s 1: Conversion period	
o+47 o+61 o+75 o+89	00 to 07	Integer unit	0: Minutes 1: Hours	
	08 to 15	Integer coefficient	0: 1 1: 1/10 2: 1/100 3: 1/1,000 4: 1/10,000	
o+90	00	Input No. 1 resistance thermometer input compensation	0: Disabled 1: Enabled	
	01	Input No. 2 resistance thermometer input compensation		
	02	Input No. 3 resistance thermometer input compensation		
	03	Input No. 4 resistance thermometer input compensation		
	04 to 15	Not used		
o+99	00	Input No. 1 cold junction compensation method	0: Internal (Use the unit's cold junction sensor.) 1: External (Do not use the unit's cold junction sensor.)	
	01	Input No. 2 cold junction compensation method		
	02	Input No. 3 cold junction compensation method		
	03	Input No. 4 cold junction compensation method		
	04 to 15	Not used		

■ CIO Areas
<CS1W-PTS02>
First word: n = 2000 + Unit No. x 10 (Unit number: 0 to 95)

Direction	Word	Bit	Name		Data range	Description
This Unit → CPU Unit	n	00	Input No. 1	Process value LL (low low limit) alarm	0, 1	0: Process value > Set value 1: Process value ≤ Set value
		01		Process value L (low limit) alarm	0, 1	
		02		Process value H (high limit) alarm	0, 1	0: Process value < Set value 1: Process value ≥ Set value
		03		Process value HH (high high limit) alarm	0, 1	
		04	Input No. 2	Process value LL (low low limit) alarm	0, 1	Same as for input No. 1.
		05		Process value L (low limit) alarm		
		06		Process value H (high limit) alarm		
		07		Process value HH (high high limit) alarm		
		08	Input No. 3	Process value LL (low low limit) alarm		
		09		Process value L (low limit) alarm		
		10		Process value H (high limit) alarm		
		11		Process value HH (high high limit) alarm		
		12	Input No. 4	Process value LL (low low limit) alarm		
		13		Process value L (low limit) alarm		
		14		Process value H (high limit) alarm		
		15		Process value HH (high high limit) alarm		
	n+1	00 to 15	Input No. 1	Process value	-32768 to 32767 (8000 to FFFF hex, 0000 to 7FFF hex)	The present process value is stored according to the scaling set in the allocated words of the DM area.
	n+2	00 to 15	Input No. 2			
	n+3	00 to 15	Input No. 3			
	n+4	00 to 15	Input No. 4			
	n+5	00 to 15	Input No. 1	Rate-of-change value	-32768 to 32767 (8000 to FFFF hex, 0000 to 7FFF hex)	The present rate of change is stored according to the scaling set in the allocated words of the DM area.
	n+6	00 to 15	Input No. 2			
	n+7	00 to 15	Input No. 3			
	n+8	00 to 15	Input No. 4			
	n+9	00	Input No. 1	Rate-of-change value L (low limit) alarm	0, 1	0: Rate-of-change value > Set value 1: Rate-of-change value ≤ Set value
		01		Rate-of-change value H (high limit) alarm	0, 1	0: Rate-of-change value < Set value 1: Rate-of-change value ≥ Set value
		02	Input No. 2	Rate-of-change value L (low limit) alarm	0, 1	Same as for input No. 1.
		03		Rate-of-change value H (high limit) alarm		
		04	Input No. 3	Rate-of-change value L (low limit) alarm		
		05		Rate-of-change value H (high limit) alarm		
		06	Input No. 4	Rate-of-change value L (low limit) alarm		
		07		Rate-of-change value H (high limit) alarm		
		08	Input No. 1	Input disconnection	0, 1	0: Normal 1: Disconnection
		09	Input No. 2			
		10	Input No. 3			
		11	Input No. 4			
		12 to 15	Not used		0	-

<CJ1W-PH41U>
First word: n = 2000 + Unit No. x 10 (Unit number: 0 to 95)

Direction	Word	Bit	Name			Data range	Description
This Unit → CPU Unit	n	00 to 15	Input No. 1	Lower	Process value	-2147483648 to 2147483647 (80000000 to FFFFFFFF hex, 00000000 to 7FFFFFFF hex)	The present process value is stored according to the scaling set in the allocated words of the DM area.
	n+1	00 to 15		Upper			
	n+2	00 to 15	Input No. 2	Lower			
	n+3	00 to 15		Upper			
	n+4	00 to 15	Input No. 3	Lower			
	n+5	00 to 15		Upper			
	n+6	00 to 15	Input No. 4	Lower			
	n+7	00 to 15		Upper			
	n+8	00	Input No. 1	Process value LL (low low limit) alarm		0, 1	0: Process value > Set value 1: Process value ≤ Set value
		01		Process value L (low limit) alarm		0, 1	
		02		Process value H (high limit) alarm		0, 1	0: Process value < Set value 1: Process value ≥ Set value
		03		Process value HH (high high limit) alarm		0, 1	
		04	Input No. 2	Process value LL (low low limit) alarm		0, 1	Same as for input No. 1.
		05		Process value L (low limit) alarm			
		06		Process value H (high limit) alarm			
		07		Process value HH (high high limit) alarm			
		08	Input No. 3	Process value LL (low low limit) alarm			
		09		Process value L (low limit) alarm			
		10		Process value H (high limit) alarm			
		11		Process value HH (high high limit) alarm			
		12	Input No. 4	Process value LL (low low limit) alarm			
		13		Process value L (low limit) alarm			
		14		Process value H (high limit) alarm			
		15		Process value HH (high high limit) alarm			
	n+9	00	Input No. 1	Rate-of-change value L (low limit) alarm		0, 1	0: Rate-of-change value > Set value 1: Rate-of-change value ≤ Set value
		01		Rate-of-change value H (high limit) alarm		0, 1	0: Rate-of-change value < Set value 1: Rate-of-change value ≥ Set value
		02	Input No. 2	Rate-of-change value L (low limit) alarm		0, 1	Same as for input No. 1.
		03		Rate-of-change value H (high limit) alarm			
		04	Input No. 3	Rate-of-change value L (low limit) alarm			
		05		Rate-of-change value H (high limit) alarm			
		06	Input No. 4	Rate-of-change value L (low limit) alarm			
		07		Rate-of-change value H (high limit) alarm			
		08	Input No. 1	Input disconnection		0, 1	0: Normal

Direction	Word	Bit	Name	Data range	Description
		09	Input No. 2		1: Disconnection
		10	Input No. 3		
		11	Input No. 4		
		12	Cold junction sensor error	0, 1	0: Normal 1: Error
		13	Zero/span adjustment period end	0, 1	0: Adjustment enabled 1: Adjustment ended Remains set to 1 if the zero/span adjustment bit has never been ON.
		14	Zero/span adjustment period notice	0, 1	0: Adjustment enabled 1: Notice period Remains set to 1 if the zero/span adjustment bit has never been ON.
		15	A/D conversion error	0, 1	0: Normal 1: Error

■ Expansion Control/Monitor Areas
<CJ1W-PH41U only>
* CS1W-PTS02 does not support specifying an expansion control/monitor area.
First word: word p. (p = address specified in word o+1 in the area specified in word o in the expansion setting area)
Direction: CPU Unit → This Unit

Direction	Word	Bit	CJ1W-PH41U				
			Name			Data range	Description
CPU Unit → This Unit	p	00 to 15	Not used			0000	---
	p+1	00	Input No. 1	Hold function selection		0, 1	0: Peak and bottom 1: Top and valley
		01	Input No. 2				
		02	Input No. 3				
		03	Input No. 4				
		04 to 07	Not used			0	---
		08	Input No. 1	Hold start		0, 1	0: Do not hold 1: Hold
		09	Input No. 2				
		10	Input No. 3				
		11	Input No. 4				
		12	Input No. 1	Hold value reset		0, 1	0: Normal operation 1: Reset hold value
		13	Input No. 2				
		14	Input No. 3				
		15	Input No. 4				
	p+2	00	Input No. 1	Integral value calculation start		0, 1	0: Do not start calculation 1: Start calculation
		01	Input No. 2				
		02	Input No. 3				
		03	Input No. 4				
		04	Input No. 1	Integral value reset		0, 1	0: Normal operation 1: Reset integral value
		05	Input No. 2				
		06	Input No. 3				
		07	Input No. 4				
		08 to 15	Not used			0	---
	p+3	00	Input No. 1	Zero/span adjustment update bit		0, 1	0: Normal operation 1: Update adjustment date (Remains ON while writing in external EEPROM.)
		01	Input No. 2				
		02	Input No. 3				
		03	Input No. 4				
		04 to 15	Not used			0	---
This Unit → CPU Unit	p+4	00 to 15	Input No. 1	Lower	Rate-of-change value	-2147483648 to 2147483647 (80000000 to FFFFFFFF hex, 00000000 to 7FFFFFFF hex)	The present rate-of-change value is stored according to the scaling set in the expansion setting area.
	p+5	00 to 15		Upper			
	p+6	00 to 15	Input No. 2	Lower			
	p+7	00 to 15		Upper			
	p+8	00 to 15	Input No. 3	Lower			
	p+9	00 to 15		Upper			
	p+10	00 to 15	Input No. 4	Lower			
	p+11	00 to 15		Upper			
	p+12	00	Input No. 1	Zero/span adjustment period end		0, 1	0: Adjustment enabled 1: Adjustment ended Remains set to 1 if the zero/span adjustment bit has never been ON.
		01		Zero/span adjustment period notice		0, 1	0: Adjustment enabled 1: Notice period Remains set to 1 if the zero/span adjustment bit has never been ON.
		02	Input No. 2	Zero/span adjustment period end		0, 1	Same as for input No. 1.
		03		Zero/span adjustment period notice			
		04	Input No. 3	Zero/span adjustment period end			
		05		Zero/span adjustment period notice			
		06	Input No. 4	Zero/span adjustment period end			
		07		Zero/span adjustment period notice			
		08	EEPROM error			0, 1	0: Normal 1: Error
		09 to 15	Not used			0	---
This Unit → CPU Unit	p+13	00 to 15	Input No. 1	Day of final adjustment date		0100 to 3100 (BCD)	・Stores the date when the update bit turned ON last. ・Remains set to FFFF if the zero/span adjustment bit has never been ON.
	p+14	00 to 15		Year and month of final adjustment date		0001 to 9912 (BCD)	
	p+15	00 to 15	Input No. 2	Day of final adjustment date		0100 to 3100 (BCD)	
	p+16	00 to 15		Year and month of final adjustment date		0001 to 9912 (BCD)	

Direction	Word	Bit	CJ1W-PH41U				
			Name			Data range	Description
	p+17	00 to 15	Input No. 3	Day of final adjustment date		0100 to 3100 (BCD)	
	p+18	00 to 15		Year and month of final adjustment date		0001 to 9912 (BCD)	
	p+19	00 to 15	Input No. 4	Day of final adjustment date		0100 to 3100 (BCD)	
	p+20	00 to 15		Year and month of final adjustment date		0001 to 9912 (BCD)	
	p+21	00	Input No. 1	Valley detection timing flag		0, 1	Turns ON when a valley is detected by the valley hold function and turns OFF after a cycle.
		01		Top detection timing flag		0, 1	Turns ON when a top is detected by the top hold function and turns OFF after a cycle.
		02	Input No. 2	Valley detection timing flag		0, 1	Same as for input No. 1.
		03		Top detection timing flag			
		04	Input No. 3	Valley detection timing flag			
		05		Top detection timing flag			
		06	Input No. 4	Valley detection timing flag			
		07		Top detection timing flag			
		08 to 15	Not used			0	---
	p+22	00 to 15	Input No. 1	Lower	Peak/top value	-2147483648 to 2147483647 (80000000 to FFFFFFFF hex, 00000000 to 7FFFFFFF hex)	The peak or top value is stored according to the scaling set in the DM area.
	p+23	00 to 15		Upper			
	p+24	00 to 15		Lower	Bottom/valley value	-2147483648 to 2147483647 (80000000 to FFFFFFFF hex, 00000000 to 7FFFFFFF hex)	The bottom or valley value is stored according to the scaling set in the DM area.
	p+25	00 to 15		Upper			
	p+26	00 to 15	Input No. 2	Lower	Peak/top value	-2147483648 to 2147483647 (80000000 to FFFFFFFF hex, 00000000 to 7FFFFFFF hex)	Same as for input No. 1.
	p+27	00 to 15		Upper			
	p+28	00 to 15		Lower	Bottom/valley value		
	p+29	00 to 15		Upper			
	p+30	00 to 15	Input No. 3	Lower	Peak/top value		
	p+31	00 to 15		Upper			
	p+32	00 to 15		Lower	Bottom/valley value		
	p+33	00 to 15		Upper			
	p+34	00 to 15	Input No. 4	Lower	Peak/top value		
	p+35	00 to 15		Upper			
	p+36	00 to 15		Lower	Bottom/valley value		
	p+37	00 to 15		Upper			
	p+38	00 to 15	Input No. 1	Lower	Integral value	-2147483648 to 2147483647 (80000000 to FFFFFFFF hex, 00000000 to 7FFFFFFF hex)	The integral value for the process value is stored according to the scaling set in the DM area.
	p+39	00 to 15		Upper			
	p+40	00 to 15	Input No. 2	Lower	Integral value		
	p+41	00 to 15		Upper			
	p+42	00 to 15	Input No. 3	Lower	Integral value		
	p+43	00 to 15		Upper			
	p+44	00 to 15	Input No. 4	Lower	Integral value		
	p+45	00 to 15		Upper			

(4) Differences in wiring and terminal arrangement

CS1W-PTS02	CJ1W-PH41U
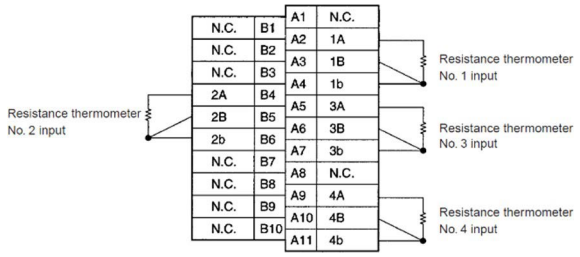	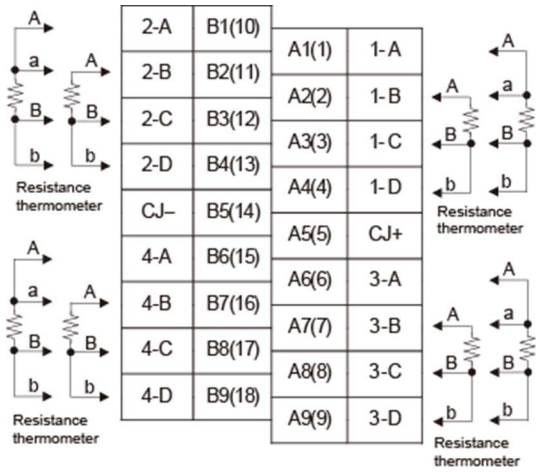

Reference manuals

CS1W-PTS02: *CS/CJ-series Analog I/O Units Operation Manual* (Cat. No. W368)

CJ1W-AD04U: *CS/CJ-series Analog I/O Units Operation Manual* (Cat. No. W368)

Appendix 6.17. CS1W-PDC01

(1) Selection of a replacement model and notes for replacement

Replacement model	Notes and restrictions
CJ1W-PH41U	● Equivalent in the functions and capabilities. ● Different in the CIO areas and DM areas. ● Additional areas for expansion control/monitor areas (46 channels) and expansion setting areas (100 words) are necessary.

(2) Differences in functions and capabilities

Item	CS1W-PDC01	CJ1W-PH41U	
	Specifications	Difference	Specifications (focusing on voltage and current)
Number of inputs	4	○	4
Input signal type	4 to 20 mA, 0 to 20 mA, -10 to 10 V, 0 to 10 V, -5 to 5 V, 1 to 5 V, 0 to 5 V, or ±10-V user-set range	○	4 to 20 mA, 0 to 20 mA, 1 to 5 V, 0 to 1.25 V, 0 to 5 V, 0 to 10 V, -1.25 to 1.25 V, -5 to 5 V, -10 to 10 V, or ±10-V user-set range
User-defined scaling in industrial units	Scaling is required (with the minimum and maximum values set by user) (4 inputs set separately).	○	Scaling is required (with the minimum and maximum values set by user) (4 inputs set separately).
Accuracy (25ºC)	±0.1%	◎	±0.05%
Temperature coefficient	±0.015%/ºC	◎	±0.008%/ºC
Resolution	1/4,096	◎	1/64,000 (conversion period: 10 ms)
Input signal range	・ 4 to 20 mA, 0 to 20 mA, 0 to 10 V, 1 to 5 V, 0 to 5 V: -15 to 115% ・ -10 to 10 V, -5 to 5 V: -7.5 to 107.5% ・ ±10-V user-set range: -7.5 to 107.5% of internal range	◎	・ 4 to 20 mA, 1 to 5 V, 0 to 1.25 V, 0 to 5 V, 0 to 10 V: -15 to 115% ・ 0 to 20 mA: 0 to 115% ・ -1.25 to 1.25 V, -5 to 5 V, -10 to 10 V, ±10-V user-set range: -7.5 to 107.5%
Maximum rated input	Voltage input: ±15 V Current input: ±30 mA	○	Voltage input: ±15 V Current input: ±30 mA
Input impedance	Current input: 250 Ω Voltage input: 1 MΩ min.	△	Current input: 150 Ω Voltage input: 1 MΩ min.
Warm-up period	10 minutes	△	30 minutes
Response time	0.5 s (travel time from input 0% to 90%)	◎	0.1 s (travel time from input 0% to 90%)
Conversion period	100 ms/4 points	◎	10 ms/4 points (1/64,000 resolution)
Input error detection	Monitors with 4 to 20 mA or 1 to 5 V only and detects an error if the input falls below -17.2% or exceeds 112.5%.	○	Detects an error if the input exceeds 115% or falls below -15% of the measurable input range.
Operation at input disconnection	4 to 20 mA, 1 to 5 V: Stores a process value corresponding to -15%. Other ranges: Stores a process value at 0 V or 0 mA.	○	4 to 20 mA, 1 to 5 V: Stores a process value corresponding to -15%. Other ranges: Stores a process value at 0 V or 0 mA.
Mean value processing	Calculates the moving average for the specified number of process values (1 to 16), and stores that value in the CIO Area as the process value.	○	Calculates the moving average for the specified number of process values (1 to 128), and stores that value in the CIO Area as the process value.
Process value alarm	Process value 4-point alarm (HH, H, L, LL), alarm hysteresis, and ON-delay timer (0 to 60 s) are available.	○	Process value 4-point alarm (LL, L, H, HH), alarm hysteresis, and ON/OFF-delay timer (0 to 60 s) are available.
Rate-of-change calculation	Calculates the amount of change per comparison time interval (1 to 16 s).	○	Calculates the amount of change per comparison time interval (1 to 16 s).
Rate-of-change alarm	Rate-of-change 2-point alarm (H, L), alarm hysteresis, and ON-delay timer (0 to 60 s, shared with process value alarm) are available.	○	Rate-of-change 2-point alarm (L, H), alarm hysteresis, and ON-delay timer (0 to 60 s, shared with process value alarm) are available.
Square root calculation	When the maximum value for process value scaling is A and the minimum value is B, $\text{Output} = \sqrt{(A-B)\ (\text{Input}-B)} + B$ Drop-out: output up to approx. 7%, which has a linear characteristic (output = input)	○	When the maximum value for process value scaling is A and the minimum value is B, $\text{Output} = \sqrt{(A-B)\ (\text{Input}-B)} + B$ Drop-out: output up to approx. 7%, which has a linear characteristic (output = input)
Isolation	Between channels and between input terminals and PLC signals	○	Between channels and between input terminals and PLC signals

Difference: Enhanced (◎), Equivalent (○), Degraded (△), or Incompatible feature (×)

(3) Differences in memory area allocations

・ For process value alarm and rate-of-change alarm of CS1W-PDC01, use expansion control/monitor areas (46 channels) and expansion setting areas (100 words) on CJ1W-PH41U. Allocate them to empty areas.

Size	Addresses	Name
Expansion setting areas 100 words	m+98 m: First word of DM area	Expansion setting area allocations 0: Not used, 1: DM, 2: CIO, 3: W, 4: H, 5: EM
	m+99	First word of expansion setting area
Expansion control/monitor areas 46 channels	o+32 o: First word of expansion control/monitor area	Expansion control/monitor area allocations 0: Not used, 1: DM, 2: CIO, 3: W, 4: H, 5: EM
	o+33	First word of expansion control/monitor area

■ CIO Areas

Differences in CIO areas

Input	Name	CS1W-PDC01		CJ1W-PH41U		Remarks
		Word	Bit	Word	Bit	
Input No. 1	Process value LL alarm	n	00	n+8	00	・ CJ1W-PH41U Different in the channel allocations.
	Process value L alarm		01		01	
	Process value H alarm		02		02	
	Process value HH alarm		03		03	
Input No. 2	Process value LL alarm		04		04	
	Process value L alarm		05		05	
	Process value H alarm		06		06	
	Process value HH alarm		07		07	
Input No. 3	Process value LL alarm		08		08	
	Process value L alarm		09		09	
	Process value H alarm		10		10	
	Process value HH alarm		11		11	
Input No. 4	Process value LL alarm		12		12	
	Process value L alarm		13		13	
	Process value H alarm		14		14	
	Process value HH alarm		15		15	
Input No. 1	Process value	n+1		n/n+1		(*1)
Input No. 2		n+2		n+2/n+3		
Input No. 3		n+3		n+3/n+4		
Input No. 4		n+4		n+5/n+6		
Input No. 1	Rate-of-change value	n+5		p+4/p+5		Allocated to expansion control/monitor areas. p: First word of expansion control/monitor area (*1)
Input No. 2		n+6		p+6/p+7		
Input No. 3		n+7		p+8/p+9		
Input No. 4		n+8		p+10/p+11		
Input No. 1	Rate-of-change L alarm	n+9	00	n+9	00	
	Rate-of-change H alarm		01		01	
Input No. 2	Rate-of-change L alarm		02		02	
	Rate-of-change H alarm		03		03	
Input No. 3	Rate-of-change L alarm		04		04	
	Rate-of-change H alarm		05		05	
Input No. 4	Rate-of-change L alarm		06		06	
	Rate-of-change H alarm		07		07	
Input No. 1	Input error		08		08	
Input No. 2			09		09	
Input No. 3			10		10	
Input No. 4			11		11	

*1: CJ1W-PH41U takes up 2 words.

Use a lower channel while setting the process value data length of CJ1W-PH41U to 1 word.

■ DM Areas

・ Different in the area allocations and default values. Replace them by referring to the manual.

CJ1W-PH41U takes up 2 words for the process value data length. When replacing CS1W-PDC11, set the resolution switch to 1/64,000 and the process value data length to 1 word.

Addresses	Bit	settings	Description
m+1	00 to 03	Resolution switch	~~0: 1/256,000 (conversion period: 60 ms)~~ This should not be set since a process value takes up 2 words. 1: 1/64,000 (conversion period: 10 ms) 2: 1/16,000 (conversion period: 5 ms)
	04 to 07	Process value data length	~~0: 2 words (signed double word binary data)~~ 1: 1 word (restricted to the -32768 to 32767 range)

(4) Differences in wiring and terminal arrangement

CS1W-PDC01	CJ1W-PH41U
With voltage input 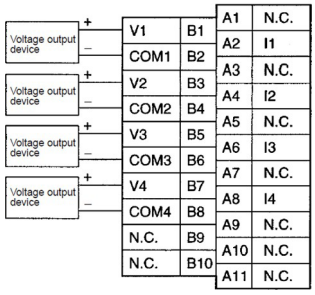 With current input 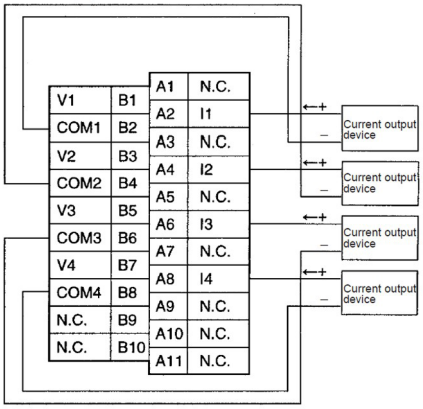	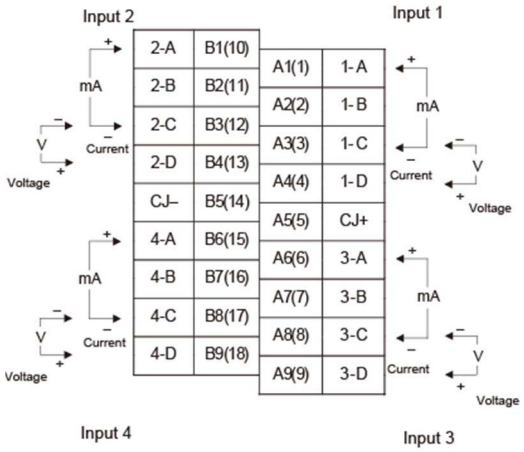

Reference manuals

CS1W-PDC01: *CS/CJ-series Analog I/O Units Operation Manual* (Cat. No. W368)

CJ1W-AD04U: *CS/CJ-series Analog I/O Units Operation Manual* (Cat. No. W368)

Appendix 6.18. CS1W-PDC11

(1) Selection of a replacement model and notes for replacement

Replacement model	Notes and restrictions
CJ1W-PH41U	● Equivalent in the functions and capabilities. ● Different in the CIO area, expansion control/monitor area, DM area, and expansion setting area allocations. ● Different in the expansion control/monitor area size (CS1W-PDC11: 35 channels and CJ1W-PH41U: 46 channels) and the expansion setting area size (CS1W-PDC11: 46 words and CJ1W-PH41U: 100 words).

(2) Differences in functions and capabilities

Item	CS1W-PDC11	CJ1W-PH41U	
	Specifications	Difference	Specifications (focusing on voltage and current)
Number of inputs	4	○	4
Input signal type	4 to 20 mA, 0 to 20 mA, -10 to 10 V, 0 to 10 V, -5 to 5 V, 1 to 5 V, 0 to 5 V, -1.25 to 1.25 V, 0 to 1.25 V, or ±10-V user-set range	○	4 to 20 mA, 0 to 20 mA, -10 to 10 V, 0 to 10 V, -5 to 5 V, 1 to 5 V, 0 to 5 V, -1.25 to 1.25 V, 0 to 1.25 V, or ±10-V user-set range
User-defined scaling in industrial units	Scaling is required (with the minimum and maximum values set by user) (4 inputs set separately).	○	Scaling is required (with the minimum and maximum values set by user) (4 inputs set separately).
Accuracy (25ºC)	±0.05%	○	±0.05%
Temperature coefficient	±0.008%/ºC	○	±0.008%/ºC
Resolution	1/64,000	○	1/64,000 (conversion period: 10 ms)
Input signal range	・ 4 to 20 mA, 0 to 10 V, 1 to 5 V, 0 to 5 V, 0 to 1.25 V: -15 to 115% ・ 0 to 20 mA: 0 to 115% ・ -1.25 to 1.25 V, -5 to 5 V, -10 to 10 V, ±10-V user-set range: -7.5 to 107.5%	○	・ 4 to 20 mA, 0 to 10 V, 1 to 5 V, 0 to 5 V, 0 to 1.25 V: -15 to 115% ・ 0 to 20 mA: 0 to 115% ・ -1.25 to 1.25 V, -5 to 5 V, -10 to 10 V, ±10-V user-set range: -7.5 to 107.5%
Maximum rated input	Voltage input: ±15 V Current input: ±30 mA	○	Voltage input: ±15 V Current input: ±30 mA
Input impedance	Current input: 250 Ω Voltage input: 1 MΩ min.	△	Current input: 150 Ω Voltage input: 1 MΩ min.
Warm-up period	10 minutes	△	30 minutes
Response time	0.1 s (travel time from input 0% to 90%)	○	0.1 s (travel time from input 0% to 90%)
Conversion period	20 ms/4 points or 10 ms/2 points	◎	10 ms/4 points (1/64,000 resolution)
Input error detection	Monitors with 4 to 20 mA or 1 to 5 V only and detects an error if the input falls below -17.2% or exceeds 112.5%.	○	Detects an error if the input exceeds 115% or falls below -15% of the measurable input range.
Operation at input disconnection	4 to 20 mA, 1 to 5 V: Stores a process value corresponding to -15%. Other ranges: Stores a process value at 0 V or 0 mA.	○	4 to 20 mA, 1 to 5 V: Stores a process value corresponding to -15%. Other ranges: Stores a process value at 0 V or 0 mA.
Mean value processing	Calculates the moving average for the specified number of process values (1 to 128), and stores that value in the CIO Area as the process value.	○	Calculates the moving average for the specified number of process values (1 to 128), and stores that value in the CIO Area as the process value.
Process value alarm	Process value 4-point alarm (HH, H, L, LL), alarm hysteresis, and ON-delay timer (0 to 60 s) are available.	○	Process value 4-point alarm (LL, L, H, HH), alarm hysteresis, and ON/OFF-delay timer (0 to 60 s) are available.
Rate-of-change calculation	Calculates the amount of change per comparison time interval (1 to 16 s).	○	Calculates the amount of change per comparison time interval (1 to 16 s).
Rate-of-change alarm	Rate-of-change 2-point alarm (H, L), alarm hysteresis, and ON-delay timer (0 to 60 s, shared with process value alarm) are available.	○	Rate-of-change 2-point alarm (L, H), alarm hysteresis, and ON-delay timer (0 to 60 s, shared with process value alarm) are available.
Square root calculation	When the maximum value for process value scaling is A and the minimum value is B, $\text{Output} = \sqrt{(A-B)\ (\text{Input}-B)} + B$ Drop-out: output up to approx. 7%, which has a linear characteristic (output = input)	○	When the maximum value for process value scaling is A and the minimum value is B, $\text{Output} = \sqrt{(A-B)\ (\text{Input}-B)} + B$ Drop-out: output up to approx. 7%, which has a linear characteristic (output = input)

Item	CS1W-PDC11	CJ1W-PH41U	
	Specifications	Difference	Specifications (focusing on voltage and current)
Adjustment period control	When zero/span adjustment is executed, the date is internally recorded at the Unit. When the preset zero/span adjustment period and number of days notice have elapsed (allocated in expansion setting area), this function turns ON a warning flag to give notice that it is time for readjustment.	○	When zero/span adjustment is executed, the date is internally recorded at the Unit. When the preset zero/span adjustment period and number of days notice have elapsed (allocated in expansion setting area), this function turns ON a warning flag to give notice that it is time for readjustment.
Peak and bottom detection	This function detects the maximum (peak) and minimum (bottom) analog input values, from when the hold start bit (output) allocated to the expansion control/monitor area turns ON until it turns OFF, and stores them in the expansion control/monitor area.	○	This function detects the maximum (peak) and minimum (bottom) analog input values, from when the hold start bit (output) allocated to the expansion control/monitor area turns ON until it turns OFF, and stores them in the expansion control/monitor area.
Top and valley detection	This function detects the top and valley analog input values, from when the hold start bit (output) allocated to the expansion control/monitor area turns ON until it turns OFF, and stores them in the expansion control/monitor area.	○	This function detects the top and valley analog input values, from when the hold start bit (output) allocated to the expansion control/monitor area turns ON until it turns OFF, and stores them in the expansion control/monitor area.
Differential value calculation	This function calculates the analog input value's time integral. The integral value is calculated and the result is output to the expansion control/monitor area when the integral value calculation start bit in the expansion control/monitor area is turned ON.	○	This function calculates the analog input value's time integral. The integral value is calculated and the result is output to the expansion control/monitor area when the integral value calculation start bit in the expansion control/monitor area is turned ON.
Isolation	Between channels and between input terminals and PLC signals	○	Between channels and between input terminals and PLC signals

Difference: Enhanced (◎), Equivalent (○), Degraded (△), or Incompatible feature (×)

(3) Differences in memory area allocations

■ CIO Areas

Differences in CIO areas

Name		CS1W-PDC11		CJ1W-PH41U			Remarks
		Word	Bit	Difference	Word	Bit	
Input No. 1	Process value LL alarm	n	00	×	n+8	00	Different in the channel allocations.
	Process value L alarm		01			01	
	Process value H alarm		02			02	
	Process value HH alarm		03			03	
Input No. 2	Process value LL alarm		04			04	
	Process value L alarm		05			05	
	Process value H alarm		06			06	
	Process value HH alarm		07			07	
Input No. 3	Process value LL alarm		08			08	
	Process value L alarm		09			09	
	Process value H alarm		10			10	
	Process value HH alarm		11			11	
Input No. 4	Process value LL alarm		12			12	
	Process value L alarm		13			13	
	Process value H alarm		14			14	
	Process value HH alarm		15			15	
Input No. 1	Process value	n+1		×	n/n+1		2 channels/inputs and so different in the channel allocations.
Input No. 2		n+2			n+2/n+3		
Input No. 3		n+3			n+3/n+4		
Input No. 4		n+4			n+5/n+6		
Input No. 1	Rate-of-change value	n+5		×	p+4/p+5		Allocated to expansion control/monitor areas. p: First word of expansion control/monitor area
Input No. 2		n+6			p+6/p+7		
Input No. 3		n+7			p+8/p+9		
Input No. 4		n+8			p+10/p+11		

Name		CS1W-PDC11		CJ1W-PH41U			Remarks
		Word	Bit	Difference	Word	Bit	
Input No. 1	Rate-of-change L alarm	n+9	00	○	n+9	00	
	Rate-of-change H alarm		01			01	
Input No. 2	Rate-of-change L alarm		02			02	
	Rate-of-change H alarm		03			03	
Input No. 3	Rate-of-change L alarm		04			04	
	Rate-of-change H alarm		05			05	
Input No. 4	Rate-of-change L alarm		06			06	
	Rate-of-change H alarm		07			07	
Input No. 1	Input error		08	○		08	
Input No. 2			09			09	
Input No. 3			10			10	
Input No. 4			11			11	
Cold junction sensor error			- (Not used)	×		12	
Zero/span adjustment period end			13	○		13	
Zero/span adjustment period notice			14			14	
A/D conversion error			- (Not used)	×		15	

Difference: Enhanced (◎), Equivalent (○), Degraded (△), or Incompatible feature (×)

Differences in expansion control/monitor areas

Name		CS1W-PDC11		CJ1W-PH41U			Remarks
		Word	Bit	Difference	Word	Bit	
Input No. 1 to 4	Hold function selection	p+1	00 to 03	○	p+1	00 to 03	
Input No. 1 to 4	Hold start		08 to 11			08 to 11	
Input No. 1 to 4	Hold value reset		12 to 15			12 to 15	
Input No. 1 to 4	Differential value calculation start	p+2	00 to 03	○	p+2	00 to 03	
Input No. 1 to 4	Integral value reset		04 to 07			04 to 07	
Input No. 1 to 4	Zero/span adjustment update bit	p+3	00 to 03	○	p+3	00 to 03	
Rate-of-change value		n+5, n+6, n+7, n+8		×	p+4 to 5, p+6 to 7, p+8 to 9, p+10 to 11		CS1W-PDC01 allocates this to a DM area. (*1)
Input No. 1 to 4	Zero/span adjustment period end	p+4	00, 02, 04, 06	×	p+12	00, 02, 04, 06	
Input No. 1 to 4	Zero/span adjustment period notice		01, 03, 05, 07			01, 03, 05, 07	
EEPROM error			08			08	
Input No. 1 to 4	Final adjustment date	p+5 to 6, p+7 to 8 p+9 to 10, p+11 to 12		×	p+13 to 14, p+15 to 16, p+17 to 18, p+19 to 20		
Input No. 1 to 4	Valley detection timing flag	p+21	00, 02, 04, 06	×	Not provided		CS1W-PDC11 does not provide this function.
Input No. 1 to 4	Top detection timing flag		01, 03, 05, 07		Not provided		CS1W-PDC11 does not provide this function.
Input No. 1 to 4	Peak/top value	p+17, p+19, p+21, p+23		×	p+22 to 23, p+26 to 27 p+30 to 31, p+34 to 35		(*1)
Input No. 1 to 4	Peak/valley value	p+18, p+20, p+22, p+24		×	p+24 to 25, p+28 to 29 p+32 to 33, p+36 to 37		(*1)
Input No. 1 to 4	Integral value	p+25 to 26, p+27 to 28 p+29 to 30, p+31 to 32		×	p+38 to 39, p+40 to 41 p+42 to 43, p+44 to 45		

Difference: Enhanced (◎), Equivalent (○), Degraded (△), or Incompatible feature (×)

*1: CJ1W-PH41U takes up 2 words.

Use a lower channel while setting the process value data length of CJ1W-PH41U to 1 word.

■ DM Areas

・ Different in the area allocations and default values. Replace them by referring to the manual.

CJ1W-PH41U takes up 2 words for the process value data length. When replacing CS1W-PDC11, set the resolution switch to 1/64,000 and the process value data length to 1 word.

Addresses	Bit	settings	Description
m+1	00 to 03	Resolution switch	~~0: 1/256,000 (conversion period: 60 ms)~~ This should not be set since a process value takes up 2 words. 1: 1/64,000 (conversion period: 10 ms) 2: 1/16,000 (conversion period: 5 ms)
	04 to 07	Process value data length	~~0: 2 words (signed double word binary data)~~ 1: 1 word (restricted to the -32768 to 32767 range)

(4) Differences in wiring and terminal arrangement

CS1W-PDC11	CJ1W-PH41U
Voltage input 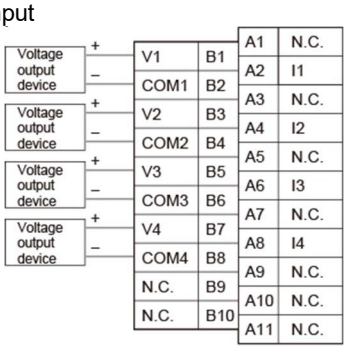 With current input 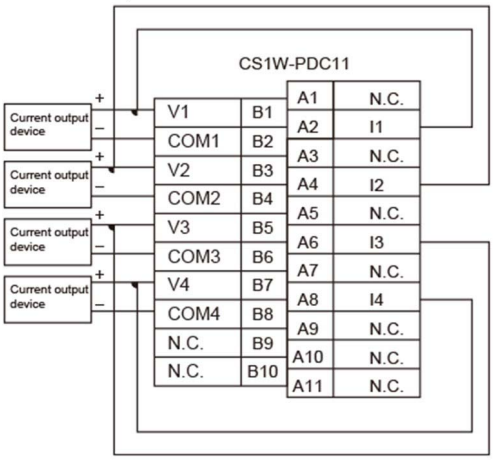 	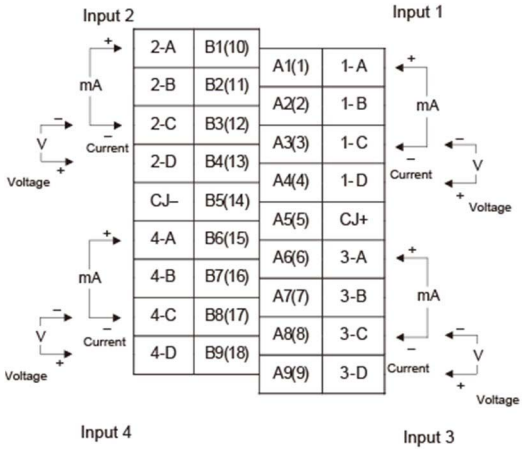

Reference manuals

CS1W-PDC11: *CS/CJ-series Analog I/O Units Operation Manual* (Cat. No. W368)

CJ1W-AD04U: *CS/CJ-series Analog I/O Units Operation Manual* (Cat. No. W368)

Appendix 6.19. CS1W-PDC55

(1) Selection of a replacement model and notes for replacement

Replacement model	Notes and restrictions
CJ1W-AD04U	● Differences in functions and capabilities Some functions (including square root calculation) are not provided. For the resolution, 1/16,000 is replaced with 1/12,000. Use CJ1W-PH41U if square root calculation and high resolution are necessary. ● Memory allocations will largely change due to the replacement of a Unit of CS1W-PDC55 having 8 points (Unit No. 1 allocated) with two Units of CJ1W-AD04U having 4 points (Unit No. 1 allocated x 2).

(2) Differences in functions and capabilities

Item	CS1W-PDC55	CJ1W-AD04U	
	Specifications	Difference	Specifications (focusing on voltage and current)
Number of inputs	8	△	4
Input signal type	0 to 10 V, 0 to 5 V, 1 to 5 V, 4 to 20 mA	◎	0 to 10 V, 0 to 5 V, 1 to 5 V, 4 to 20 mA, or 0 to 20 mA.
User-defined scaling in industrial units	Scaling is required (with the minimum and maximum values set by user) (8 inputs set separately).	○	Scaling is required (with the minimum and maximum values set by user) (4 inputs set separately).
Accuracy (25ºC)	±0.3%	○	±0.3%
Temperature coefficient	Voltage: ±100%/ºC, current: ±120 ppm/ºC	○	±100 ppm/ºC
Resolution	1/16,000	△	1/12,000
Input signal range	-5 to 105% for each range	○	-5 to 105% for each range
Maximum rated input	Voltage input: ±15 V Current input: ±30 mA	○	Voltage input: ±15 V Current input: ±30 mA
Input impedance	Current input: 250 Ω Voltage input: 1 MΩ min.	○	Current input: 250 Ω Voltage input: 1 MΩ min.
Warm-up period	10 minutes	△	30 minutes
Conversion period	250 ms/8 points	○	250 ms/4 points
Input error detection	・Detects sensor error and turns ON the sensor error flag if the input falls below -5% or exceeds 105% of the input range for each point. ・The process value overrange direction for when a sensor error is detected can be specified. (High: 105% of input range; low: -5% of input range)	△	・Detects input error with 1 to 5 V and 4 to 20 mA only. 1 to 5 V: Input signal < 0.3 V 4 to 20 mA: Input signal < 1.2 mA ・Input error flag turns ON when a disconnection occurs or when the input range is exceeded. ・The process value overrange direction for when a sensor error is detected can be specified. (High: 105% of input range; low: -5% of input range)
Process value alarm	Rate-of-change 2-point alarm (H, L), alarm hysteresis, and ON-delay timer (0 to 60 s) are available.	○	Rate-of-change 2-point alarm (H, L), alarm hysteresis, and ON-delay timer (0 to 60 s) are available.
Square root calculation	1 to 5 V and 4 to 20 mA only When the maximum value for process value scaling is A and the minimum value is B, $\text{Output} = \sqrt{(A-B)\ (\text{Input}-B)} + B$ Drop-out: output up to approx. 7%, which has a linear characteristic (output = input)	×	Not provided
Isolation	Between channels and between input terminals and PLC signals	○	Between channels and between input terminals and PLC signals

Difference: Enhanced (◎), Equivalent (○), Degraded (△), or Incompatible feature (×)

(3) Differences in memory area allocations

■ CIO Areas

Differences in CIO areas

The first word of the first CJ1W-AD04U Unit and the first word of CS1W-PDC55: n = 2000 + Unit No. x 10

The first word of the second CJ1W-AD04U Unit: n2 = 2000 + the second Unit's Unit No. x 10

Name		CS1W-PDC55		CJ1W-AD04U			Remarks
		Word	Bit	Difference	Word	Bit	
Input No. 1	Process value L alarm	n	00	○	n (First Unit)	00	The allocation of the first CJ1W-AD04U Unit remains the same.
	Process value H alarm		01			01	
Input No. 2	Process value L alarm		02			02	
	Process value H alarm		03			03	
Input No. 3	Process value L alarm		04			04	
	Process value H alarm		05			05	
Input No. 4	Process value L alarm		06			06	
	Process value H alarm		07			07	
Input No. 5	Process value L alarm	n	08	×	n2 (Second Unit)	00	The area allocations of the second CJ1W-AD04U Unit changes since it has a different Unit No.
	Process value H alarm		09			01	
Input No. 6	Process value L alarm		10			02	
	Process value H alarm		11			03	
Input No. 7	Process value L alarm		12			04	
	Process value H alarm		13			05	
Input No. 8	Process value L alarm		14			06	
	Process value H alarm		15			07	
Input No. 1	Process value	n+1		○	n+1		The allocation of the first CJ1W-AD04U Unit remains the same.
Input No. 2		n+2			n+2		
Input No. 3		n+3			n+3		
Input No. 4		n+4			n+4		
Input No. 5		n+5		×	n2+1		The area allocations of the second CJ1W-AD04U Unit changes since it has a different Unit No.
Input No. 6		n+6			n2+2		
Input No. 7		n+7			n2+3		
Input No. 8		n+8			n2+4		
Input No. 1	Input error	n+9	00	○	n+9	00	The allocation of the first CJ1W-AD04U Unit remains the same.
Input No. 2			01			01	
Input No. 3			02			02	
Input No. 4			03			03	
Input No. 5			04	×	n2+9	00	The area allocations of the second CJ1W-AD04U Unit changes since it has a different Unit No.
Input No. 6			05			01	
Input No. 7			06			02	
Input No. 8			07			03	
Conversion data enabled flag			15	○	n+9	15	First CJ1W-AD04U Unit
				×	n2+9	15	Second CJ1W-AD04U Unit

Difference: Enhanced (◎), Equivalent (○), Degraded (△), or Incompatible feature (×)

■ DM Areas

Different in the area allocations and default values. Replace them by referring to the manual.

Name		CS1W-PDC55	CJ1W-PH41U		Remarks
		First word	Difference	First word	
Input No. 1 to 4	DM area	m D20000 + Unit No. x 100	○	m D20000 + Unit No. x 100	The allocation of the first CJ1W-AD04U Unit remains the same.
Input No. 5 to 8	DM area			m2 D20000 + the second Unit's Unit No. x 100	The area allocations of the second CJ1W-AD04U Unit changes since it has a different Unit No.

Difference: Enhanced (◎), Equivalent (○), Degraded (△), or Incompatible feature (×)

(4) Differences in wiring and terminal arrangement

CS1W-PDC55	CJ1W-AD04U
Voltage input 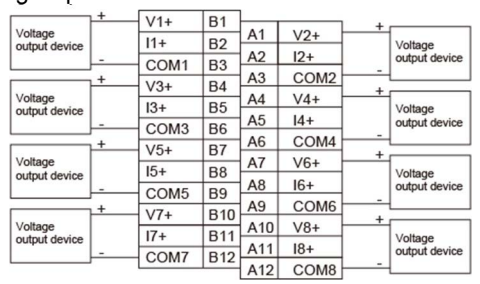 With current input 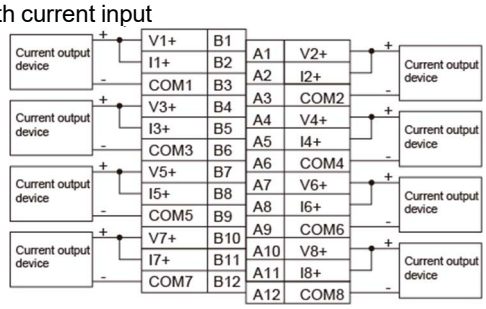	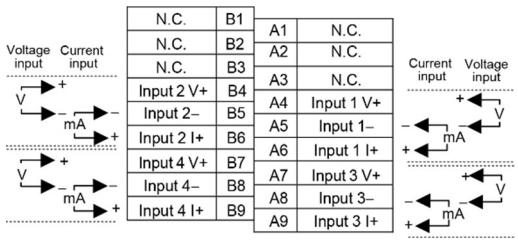

Reference manuals

CS1W-PDC55: *CS/CJ-series Analog I/O Units Operation Manual* (Cat. No. W368)

CJ1W-AD04U: *CS/CJ-series Analog I/O Units Operation Manual* (Cat. No. W368)

Appendix 6.20. CS1W-PTW01

(1) Selection of a replacement model and notes for replacement

Replacement model	Notes and restrictions
CJ1W-PH41U	● Equivalent in the functions and capabilities. ● Different in the CIO areas and DM areas. ● Additional areas for expansion control/monitor areas (46 channels) and expansion setting areas (100 words) are necessary. ● A 2-wire Transmission Device Input Unit requires rewiring to an external 24 V power supply.

(2) Differences in functions and capabilities

Item	CS1W-PTW01	CJ1W-PH41U	
	Specifications	Difference	Specifications (focusing on voltage and current)
Number of inputs	4	○	4
Input signal type	Unified signals from the 2-wire Transmission Device Input Unit (4 to 20 mA) 4 to 20 mA, 1 to 5 V	○	4 to 20 mA, 0 to 20 mA, 1 to 5 V, 0 to 1.25 V, 0 to 5 V, 0 to 10 V, -1.25 to 1.25 V, -5 to 5 V, -10 to 10 V, or ±10-V user-set range
User-defined scaling in industrial units	Scaling is required (with the minimum and maximum values set by user) (4 inputs set separately).	○	Scaling is required (with the minimum and maximum values set by user) (4 inputs set separately).
Accuracy (25ºC)	±0.2%	◎	±0.05%
Temperature coefficient	±0.015%/ºC	◎	±0.008%/ºC
Resolution	1/4,096	◎	1/64,000 (conversion period: 10 ms)
Input signal range	-15 to 115%	◎	4 to 20 mA, 1 to 5 V input: -15 to 115%
Maximum rated input	Voltage input: ±15 V Current input: ±30 mA	○	Voltage input: ±15 V Current input: ±30 mA
Input impedance	4 to 20 mA current input: 250 Ω, 1 to 5 V voltage input: 1 MΩ min.	△	Current input: 150 Ω Voltage input: 1 MΩ min.
Warm-up period	10 minutes	△	30 minutes
Response time	0.5 s (travel time from input 0% to 90%)	◎	0.1 s (travel time from input 0% to 90%)
Conversion period	100 ms/4 points	◎	10 ms/4 points (1/64,000 resolution)
Input error detection	Detects an error if the input falls below -17.2% or exceeds 112.5%.	○	Detects an error if the input exceeds 115% or falls below -15% of the measurable input range.
Operation at input disconnection	Stores a process value corresponding to -15%.	○	4 to 20 mA, 1 to 5 V: Stores a process value corresponding to -15%. Other ranges: Stores a process value at 0 V or 0 mA.
Mean value processing	Calculates the moving average for the specified number of process values (1 to 16), and stores that value in the CIO Area as the process value.	○	Calculates the moving average for the specified number of process values (1 to 128), and stores that value in the CIO Area as the process value.
Process value alarm	Process value 4-point alarm (HH, H, L, LL), alarm hysteresis, and ON-delay timer (0 to 60 s) are available.	○	Process value 4-point alarm (LL, L, H, HH), alarm hysteresis, and ON/OFF-delay timer (0 to 60 s) are available.
Rate-of-change calculation	Calculates the amount of change per comparison time interval (1 to 16 s).	○	Calculates the amount of change per comparison time interval (1 to 16 s).
Rate-of-change alarm	Rate-of-change 2-point alarm (H, L), alarm hysteresis, and ON-delay timer (0 to 60 s, shared with process value alarm) are available.	○	Rate-of-change 2-point alarm (L, H), alarm hysteresis, and ON-delay timer (0 to 60 s, shared with process value alarm) are available.
Square root calculation	When the maximum value for process value scaling is A and the minimum value is B, $\text{Output} = \sqrt{(A-B)\ (\text{Input}-B)} + B$ Drop-out: output up to approx. 7%, which has a linear characteristic (output = input)	○	When the maximum value for process value scaling is A and the minimum value is B, $\text{Output} = \sqrt{(A-B)\ (\text{Input}-B)} + B$ Drop-out: output up to approx. 7%, which has a linear characteristic (output = input)
Isolation	Between channels and between input terminals and PLC signals	○	Between channels and between input terminals and PLC signals

Difference: Enhanced (◎), Equivalent (○), Degraded (△), or Incompatible feature (×)

(3) Differences in memory area allocations

・ For process value alarm and rate-of-change alarm of CS1W-PTW01, use expansion control/monitor areas (46 channels) and expansion setting areas (100 words) on CJ1W-PH41U. Allocate them to empty areas.

Size	Addresses	Name
Expansion setting areas 100 words	m+98 m: First word of DM area	Expansion setting area allocations 0: Not used, 1: DM, 2: CIO, 3: W, 4: H, 5: EM
	m+99	First word of expansion setting area
Expansion control/monitor areas 46 channels	o+32 o: First word of expansion control/monitor area	Expansion control/monitor area allocations 0: Not used, 1: DM, 2: CIO, 3: W, 4: H, 5: EM
	o+33	First word of expansion control/monitor area

■ CIO Areas

Differences in CIO areas

Input	Name	CS1W-PTW01		CJ1W-PH41U		Remarks
		Word	Bit	Word	Bit	
Input No. 1	Process value LL alarm	n	00	n+8	00	・CJ1W-PH41U Different in the channel allocations.
	Process value L alarm		01		01	
	Process value H alarm		02		02	
	Process value HH alarm		03		03	
Input No. 2	Process value LL alarm		04		04	
	Process value L alarm		05		05	
	Process value H alarm		06		06	
	Process value HH alarm		07		07	
Input No. 3	Process value LL alarm		08		08	
	Process value L alarm		09		09	
	Process value H alarm		10		10	
	Process value HH alarm		11		11	
Input No. 4	Process value LL alarm		12		12	
	Process value L alarm		13		13	
	Process value H alarm		14		14	
	Process value HH alarm		15		15	
Input No. 1	Process value	n+1		n/n+1		(*1)
Input No. 2		n+2		n+2/n+3		
Input No. 3		n+3		n+3/n+4		
Input No. 4		n+4		n+5/n+6		
Input No. 1	Rate-of-change value	n+5		p+4/p+5		Allocated to expansion control/monitor areas. p: First word of expansion control/monitor area (*1)
Input No. 2		n+6		p+6/p+7		
Input No. 3		n+7		p+8/p+9		
Input No. 4		n+8		p+10/p+11		
Input No. 1	Rate-of-change L alarm	n+9	00	n+9	00	
	Rate-of-change H alarm		01		01	
Input No. 2	Rate-of-change L alarm		02		02	
	Rate-of-change H alarm		03		03	
Input No. 3	Rate-of-change L alarm		04		04	
	Rate-of-change H alarm		05		05	
Input No. 4	Rate-of-change L alarm		06		06	
	Rate-of-change H alarm		07		07	
Input No. 1	Input error		08		08	
Input No. 2			09		09	
Input No. 3			10		10	
Input No. 4			11		11	

*1: CJ1W-PH41U takes up 2 words.

Use a lower channel while setting the process value data length of CJ1W-PH41U to 1 word.

■ DM Areas

・ Different in the area allocations and default values. Replace them by referring to the manual.

CJ1W-PH41U takes up 2 words for the process value data length. When replacing CS1W-PTW01, set the resolution switch to 1/64,000 and the process value data length to 1 word.

Addresses	Bit	settings	Description
m+1	00 to 03	Resolution switch	~~0: 1/256,000 (conversion period: 60 ms)~~ This should not be set since a process value takes up 2 words. 1: 1/64,000 (conversion period: 10 ms) 2: 1/16,000 (conversion period: 5 ms)
	04 to 07	Process value data length	~~0: 2 words (signed double word binary data)~~ 1: 1 word (restricted to the -32768 to 32767 range)

(4) Differences in wiring and terminal arrangement

CS1W-PTW01	CJ1W-PH41U
With 2-wire Transmission Device Input Unit input 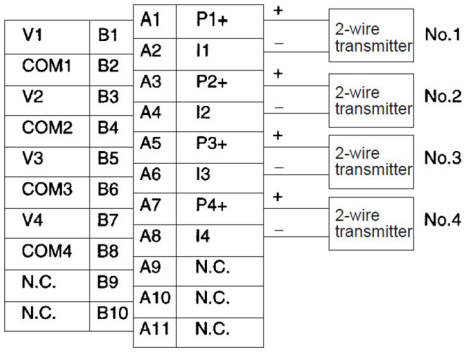 With voltage input 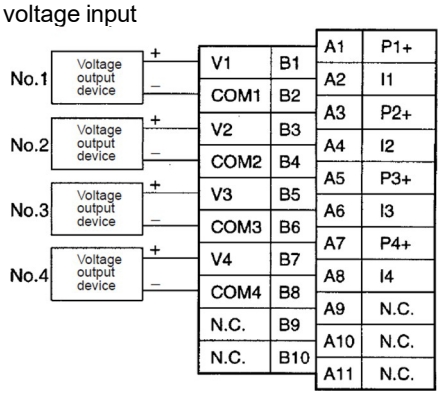 With current input 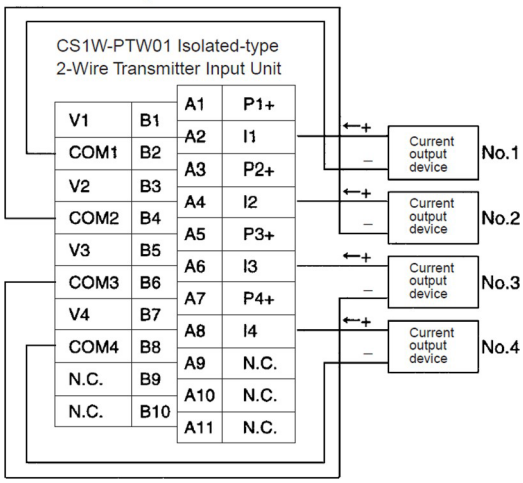 	With 2-wire Transmission Device Input Unit input 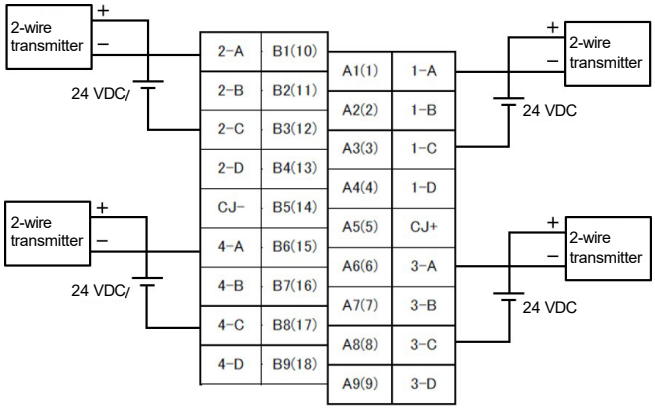 With voltage and current 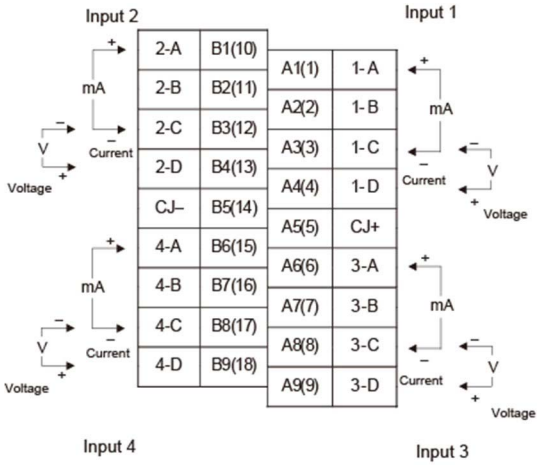

Reference manuals

CS1W-PTW01: *CS/CJ-series Analog I/O Units Operation Manual* (Cat. No. W368)

CJ1W-PH41U: *CS/CJ-series Analog I/O Units Operation Manual* (Cat. No. W368)

Appendix 6.21. CS1W-SCU□1-V1/CS1W-SCB□1-V1

(1) Selection of a replacement model and notes for replacement

Replacement model, notes, and restrictions

Replacement model

	Existing model		Replacement model
Port 1: RS-232C Port 2: RS-232C	CS1W-SCB21-V1	CS1W-SCU21-V1	CJ1W-SCU22
Port 1: RS-422A/485 Port 2: RS-422A/485		CS1W-SCU31-V1	CJ1W-SCU22
Port 1: RS-232C Port 2: RS-422A/485	CS1W-SCB41-V1		CJ1W-SCU42

Notes and restrictions

Replacing CS1W-SCU□1-V1 with CJ1W-SCU□2

- The specifications, functions, and memory allocations remain the same.
- The RS-422A/485 interface changes from the D-sub connector to the terminal block.

Replacing CS1W SCB□1-V1 with CJ1W-SCU□2

- The specifications and functions remain the same.
- Allocating Unit numbers is necessary since the inner board is replaced with the CPU Bus Unit. Memory area allocations will change according to the set Unit numbers
- The RS-422A/485 interface changes from the D-sub connector to the terminal block.
- In the no-protocol mode, TXD/RXD instructions must be replaced with TXDU/RXDU instructions.
- For protocol macro (PMCR) instructions, the control data must be changed.
- For change serial port setup (STUP) instructions, the control data must be changed.

(2) Differences in functions and capabilities

■ Differences in Specifications

Item	CS1W-SCB□1-V1	CS1W-SCU□1-V1	CJ1W-SCU□2	
	Specifications	Specifications	Difference	Specifications
Unit type	Inner board	CPU Bus Unit	△	CPU Bus Unit
Number of mountable boards/Units	One board per inner board slot	16 Units max.	○	16 Units max.
Data exchange with the CPU Unit	Inner board area	CPU Bus Unit area	△	CPU Bus Unit area
Simple backup function	Simple backup can backup/restore the protocol macro data to/from the memory card.		○	Simple backup can backup/restore the protocol macro data to/from the memory card.
Communications distance	RS-232C port: 15 m max. RS-422A/485 port: 500 m max.		◎	RS-232C port: 15 m max. RS-422A/485 port: 1,200 m max.
Protocol				
Host link	Half-duplex Baud rate: 115.2 kbps max. Maximum number of connected Units: 32 Frame structure: C-mode commands, FINS commands		◎	Baud rate: 230.4 kbps max. The same except for the baud rate
Protocol macro	Half-duplex or full-duplex Baud rate: 57.6 kbps max. Maximum number of connected Units: 32 Number of protocols: 20 max. Number of sequences: 1,000 max. Sequence execution condition: Using the PLC's PMCR instruction		◎	Baud rate: 230.4 kbps max. The same except for the baud rate The CS1W's protocol macro data can be used as is.
NT Link (1:N)	Baud rate: 115.2 kbps max. Maximum number of Units connected via NT-Link: 8		○	Baud rate: 115.2 kbps max. The same in the specifications

Item	CS1W-SCB□1-V1	CS1W-SCU□1-V1	CJ1W-SCU□2	
	Specifications	Specifications	Difference	Specifications
No-protocol	Full-duplex Baud rate: 57.6 kbps max. Sending messages: TXD instruction (CS1W-SCB□1-V1) TXDU instruction (CS1W-SCU□1-V1) Receiving messages: RXD instruction (CS1W-SCB□1-V1) RXDU instruction (CS1W-SCU□1-V1) Maximum message length: 256 bytes		◎	Baud rate: 230.4 kbps max. Sending messages TXD/DTXDU instruction Receiving messages RXD/DRXDU instruction The same in the other specifications
Serial gateway	Baud rate: 115.2 kbps max. Conversion source: FINS command After conversion: CompoWay/F commands Modbus-RTU and Modbus-ASCII commands Host Link FINS commands		◎	Baud rate: 230.4 kbps max. The same except for the baud rate
Modbus-RTU slave	Mode: Modbus-RTU slave mode Baud rate: 115.2 kbps max. Address setting range: 1 to 247 (broadcasting: 0)		◎	Baud rate: 230.4 kbps max. The same except for the baud rate

Difference: Enhanced (◎), Equivalent (○), Degraded (△), or Incompatible feature (×)

(3) Differences in memory area allocations

■ CIO Areas

・ Differences in CIO areas: Only CS1W-SCB□1-V1 is different in the area allocation words.

Name	CS1W-SCB□1-V1	CS1W-SCU□1-V1	CJ1W-SCU□2	
	Word	Word n = 1500 + 25 x Unit No.	Difference	Word n = 1500 + 25 x Unit No.
Software switch	1900	n	△	n
Status (board/Unit)	1901 to 1904	n+1 to n+4	△	n+1 to n+4
Status (port 1)	1905 to 1914 (*1)	n+5 to n+14	△	n+5 to n+14
Status (port 2)	1915 to 1924 (*1)	n+15 to n+24	△	n+15 to n+24

Difference: Enhanced (◎), Equivalent (○), Degraded (△), or Incompatible feature (×)

*1: CS1W-SCB□1-V1 will be allocated to AR areas if in the no-protocol mode. (Refer to *Relevant Auxiliary areas*)

CS1W-SCU□1-V1 and CJ1W-SCU□2 will be allocated to CIO areas above.

■ DM Areas

・ Differences in DM areas: Only CS1W-SCB□1-V1 is different in the area allocation words.

Name	CS1W-SCB□1-V1	CS1W-SCU□1-V1	CJ1W-SCU□2	
	Word	Word m = D30000 + 100 x Unit No.	Difference	Word m = D30000 + 100 x Unit No.
Port 1 setup area	D32000 to D32009	m to m+9	△	m to m+9
Port 2 setup area	D32010 to D32019	m+10 to m+19	△	m+10 to m+19
Port 1 setup area (Modbus-RTU slave)	D32020 to D32029	m+20 to m+29	△	m+20 to m+29
Port 2 setup area (Modbus-RTU slave)	D32030 to D32039	m+30 to m+39	△	m+30 to m+39

Difference: Enhanced (◎), Equivalent (○), Degraded (△), or Incompatible feature (×)

■ Relevant Auxiliary Areas

・ Differences in DM areas: CS1W-SCB□1-V1 is different in the area allocation words/bits.

Name	CS1W-SCB□1-V1		CS1W-SCU□1-V1		CJ1W-SCU□2		
	Word	Bit	Word	Bit	Difference	Word	
Serial communications board port 1/2 setup change flag	A636	02: Port 1 01: Port 2	A620 + Unit number	02: Port 1 01: Port 2	△	A620 + Unit number	02: Port 1 01: Port 2
Unit/board restart flag	A608	00	A501	Unit number	△	A501	Unit number
No-protocol mode bits							
Port 1 reception overflow flag	A356	07	1509 + 25 x Unit number	07	△	1509 + 25 x Unit number	07
Port 1 reception completed flag		06		06	△		06
Port 1 send ready flag		05		05	△		05
Port 1 receive counter	A357		1510 + 25 x Unit number		△	1510 + 25 x Unit number	
Port 1 reception overflow flag	A356	15	1519 + 25 x Unit number	07	△	1519 + 25 x Unit number	07
Port 1 reception completed flag		14		06	△		06
Port 1 send ready flag		13 (TXD)		05 (TXDU)	△		05 (TXDU)
		-		-			04 (DTXDU)
Port 1 receive counter	A358		1520 + 25 x Unit number		△	1520 + 25 x Unit number	

Difference: Enhanced (◎), Equivalent (○), Degraded (△), or Incompatible feature (×)

(4) Changes in programming

Changing instruction operands is necessary to replace CS1W-SCB□1-V1 with CJ1W-SCU□2.

■ No-protocol Mode

CS1W-SCB□1-V1	CJ1W-SCU□2 (CS1W-SCU□1-V1)
TXD/RXD instruction	Replaced with TXDU/RXDU instruction

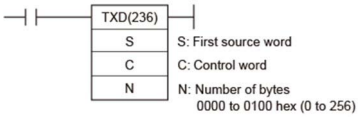

Operand	Description	Size
S	First word of send/receive data	Variable
C	Control data	1
N	Number of bytes	1

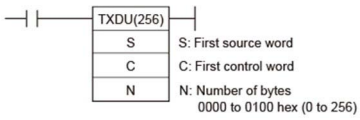

Operand	Description	Size
S	First word of send/receive data	Variable
C	Control data	2
N	Number of bytes	1

Part to be changed (for both TXD and RXD instructions)
Control data

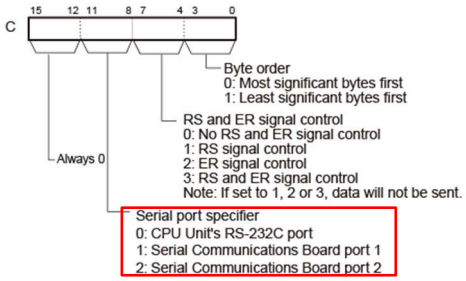

Change details (for both TXD and RXD instructions)

・ The control data takes up 2 words.
・ Set the Unit No. and serial port No. in the control data (C+1).
・ Allocating internal logical ports is necessary.

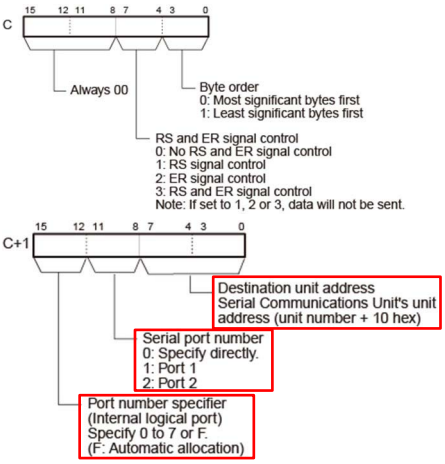

■ Protocol Macro Mode

<table>
<tr><th>CS1W-SCB□1-V1</th><th>CJ1W-SCU□2 (CS1W-SCU□1-V1)</th></tr>
<tr><td>

PMCR instruction

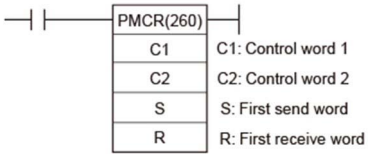

Operand	Description	Size
C1	Control word 1	1
C2	Control word 2	1
S	First send word of send data	Variable
D	First receive word	Variable

Part to be changed
Control data 1

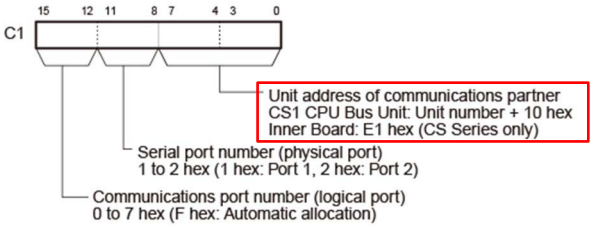

</td><td>

PMCR instruction can be used as is.

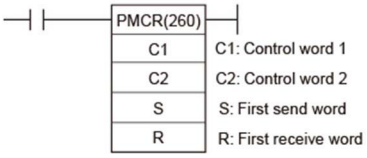

Operand	Description	Size
C1	Control word 1	1
C2	Control word 2	1
S	First send word	Variable
D	First receive word	Variable

Change details
Control data 1

・ Change the Unit's address of communications partner from "#E1" to "Unit number + 10 (hex)".

Example: When the Unit number is 10
Unit number +#10 (hex) = #1A

</td></tr>
</table>

■ Host Link Mode

CS1W-SCB□1-V1

・SEND/RECV instruction

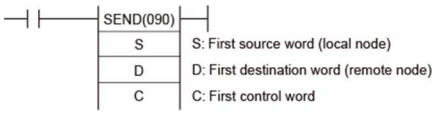

Operand

Operand	Description	Size
S	First source word	Variable
D	First destination word	Variable
C	First control data	5

Part to be changed
Control data

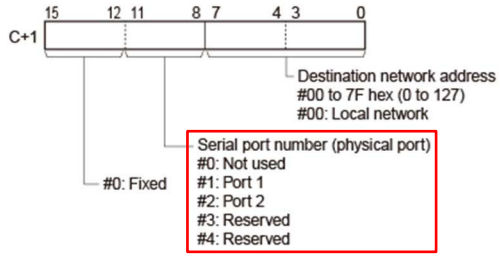

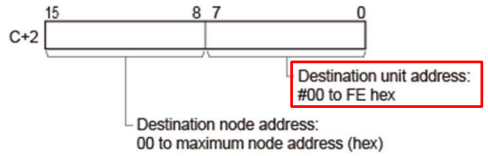

・CMND instruction

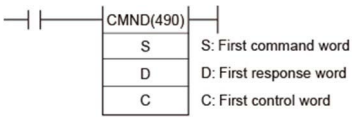

Operand

Operand	Description	Size
S	First word of store command	Variable
D	First word of store response	Variable
C	Last word of control data	6

Part to be changed
Control data

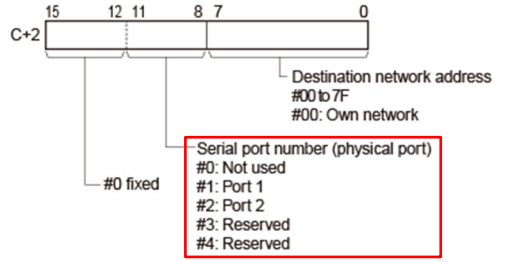

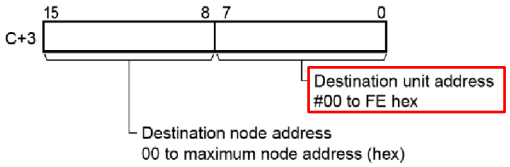

CJ1W-SCU□2 (CS1W-SCU□1-V1)

・SEND/RECV instructions can be used as is.

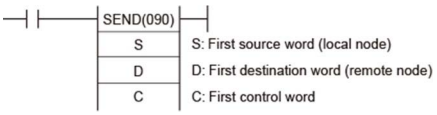

Operand

Operand	Description	Size
S	First source word	Variable
D	First destination word	Variable
C	First control data	5

Change details
Control data

How to replace differs depending on the setting.
*: The content in parentheses is for CMND instruction.

(1) When CS1W-SCB□1-V1 is configured to have the destination Unit's address allocated to bits 00 to 07 of C+2(C+3) and the port No. allocated to bits 8 to 11 of C+1(C+2)

Change the destination Unit's address in C+2(C+3) from "#E1" to "Unit number + 10 (hex).

(2) When the serial port Unit's address is allocated to bits 00 to 07 of C+2(C+3) (bits 8 to 11 of C+1 are #0)

Change the destination Unit's address in C+2(C+3).
For "#E4" (port 1),
"#4 x Unit number + #80 (hex)"
Example: When the Unit number is 1
#80 + #04 x 1 = #84

For "#E5" (port 2),
"#4 x Unit number + #81 (hex)"

(5) Differences in connector pin layout

The RS-422A/485 port connector changes to the terminal block.

CS1W-SCB□1-V1/CS1W-SCU□1-V1

RS-232C port: D-sub 9 pin

Pin No.	Abbreviation	Signal name	I/O
1	FG	Shield	-
2	SD	Send data	Output
3	RD	Receive data	Input
4	RS	Request to send	Output
5	CS	Clear to send	Input
6	5 V	Power supply	-
7	DR	Data set ready	Input
8	ER	Data terminal ready	Output
9	SG	Signal ground	-
Hood	FG	Shield	-

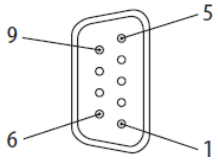

RS-422A/485 port: D-sub 9 pin

Pin No.	Abbreviation	Signal name	I/O
1	SDA	Transmission data -	Output
2	SDB	Transmission data +	Output
3	NC	Not used	-
4	NC	Not used	-
5	NC	Not used	-
6	RDA	Reception data -	Input
7	NC	Not used	-
8	RDB	Reception data +	Input
9	NC	Not used	-
Hood	FG	Shield	-

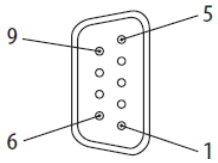

CJ1W-SCU□2

RS-232C port: D-sub 9 pin

Pin No.	Abbreviation	Signal name	I/O
1	FG	Shield	-
2	SD	Send data	Output
3	RD	Receive data	Input
4	RS	Request to send	Output
5	CS	Clear to send	Input
6	5 V	Power supply	-
7	DR	Data set ready	Input
8	ER	Data terminal ready	Output
9	SG	Signal ground	-
Hood	FG	Shield	-

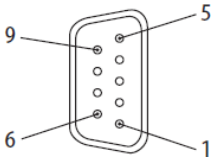

RS-422A/485 port: Terminal block, 5 pin

Pin No.	Abbreviation	Signal name	I/O
1	RDA	Reception data -	Input
2	RDB	Reception data +	Input
3	SDA	Transmission data -	Output
4	SDB	Transmission data +	Output
5	FG	Shield	-

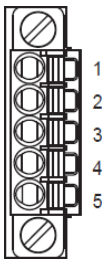

Reference manuals

For both CS1W-SCU□1/SCB□1-V1 and CJ1W-SCU□2:

CS/CJ-series Serial Communications Boards/Units Operation Manual (Cat. No. W336)

Appendix 6.22. CS1W-CT021/041

(1) Selection of a replacement model and notes for replacement

Selection of a replacement model: Take into account whether to use CS1W-CT021/CT041 functions and performance requirements.

Replacement model	Notes and restrictions
CJ1W-CT021	● Equivalent in the functions and capabilities. ● Equivalent in the I/O specifications. ● Different in the CIO areas and DM areas. ● Two CJ1W-CT021 Units are necessary to replace a CS1W-CT041 Unit.

(2) Differences in functions and capabilities

Item	CS1W-CT021	CS1W-CT041	CJ1W-CT021	
	Specifications	Specifications	Difference	Specifications
Number of counters	2	4	△	2
Counter type	・ Simple counter ・ Circular counter ・ Linear counter The counter type can be chosen by DIP switch at the front of the Unit. By default the counters are set to simple counter.		○	・ Simple counter ・ Circular counter ・ Linear counter The counter type can be chosen by DIP switch at the front of the Unit. By default the counters are set to simple counter.
Maximum input frequency	500 kHz		○	500 kHz
Maximum response time	0.5 ms (the time from counter input to external output)		○	0.5 ms (the time from counter input to external output)
Signals per counter	Phase A, B and Z		○	Phase A, B and Z
Digital I/O	・ 4 digital inputs (I0, I1, I2, I3) Each digital input can be assigned to a counter. In this way one counter can be controlled by a maximum of 4 digital inputs. ・ 4 digital outputs (O0, O1, O2, O3) The Unit uses the unit output pattern internally to control the outputs. The unit output pattern represents the 4 digital outputs and 28 soft outputs.		△	・ 2 digital inputs (I0, I1) Each digital input can be assigned to a counter. In this way one counter can be controlled by a maximum of 2 digital inputs. ・ 2 digital outputs (O0, O1) The Unit uses the unit output pattern internally to control the outputs. The unit output pattern represents the 2 digital outputs and 30 soft outputs.
Input signal types	・ Phase differential (multiplication x1), (multiplication x2), and (multiplication x4) ・ Up/down ・ Pulse & direction		○	・ Phase differential (multiplication x1), (multiplication x2), and (multiplication x4) ・ Up/down ・ Pulse & direction
Counter control using CIO software bits	・ Open Gate / Start Counter: Counter is enabled to count pulses. ・ Close Gate / Stop Counter: Counter is disabled to count pulses. ・ Preset Counter: Preset Value can be set in CIO. ・ Reset Counter to zero. ・ Capture Counter Value: Captured Counter Value can be read using IORD instruction.		○	・ Open Gate / Start Counter: Counter is enabled to count pulses. ・ Close Gate / Stop Counter: Counter is disabled to count pulses. ・ Preset Counter: Preset Value can be set in CIO. ・ Reset Counter to zero. ・ Capture Counter Value: Captured Counter Value can be read using IORD instruction.
Digital input functionality	・ Gate ・ Reset ・ Preset ・ Capture ・ Stop/Capture-Continue ・ Stop/Capture-Reset/Continue ・ Capture/Reset ・ Enable Reset ・ Disable Reset ・ For each function, the corresponding action can be triggered on a rising or falling edge.		○	・ Gate ・ Reset ・ Preset ・ Capture ・ Stop/Capture-Continue ・ Stop/Capture-Reset/Continue ・ Capture/Reset ・ Enable Reset ・ Disable Reset ・ For each function, the corresponding action can be triggered on a rising or falling edge.
Output control mode	・ Automatic output control in: Range mode Comparison mode ・ Rate range ・ Manual output control		○	・ Automatic output control in: Range mode Comparison mode ・ Rate range ・ Manual output control

Item	CS1W-CT021	CS1W-CT041	CJ1W-CT021	
	Specifications	Specifications	Difference	Specifications
Output state control	The output state control of 32 outputs can be set as below for when the operating mode of the CPU Unit changes from RUN/MONITOR to PROGRAM, when an I/O bus error occurs, or when an overflow/underflow error occurs. ・ Continue automatic updating of output states ・ Freeze output states *1 ・ Predefine output states		○	The output state control of 32 outputs can be set as below for when the operating mode of the CPU Unit changes from RUN/MONITOR to PROGRAM, when an I/O bus error occurs, or when an overflow/underflow error occurs. ・ Continue automatic updating of output states ・ Freeze output states*1 ・ Predefine output states
Output driver configuration	The output driver of each digital output can be configured as: ・ NPN ・ PNP		○	The output driver of each digital output can be configured as: ・ NPN ・ PNP
Reset signals	Each counter can be reset to zero by (a combination of) the following sources: ・ Software counter reset bit ・ Digital input ・ Z-input		○	Each counter can be reset to zero by (a combination of) the following sources: ・ Software counter reset bit ・ Digital input ・ Z-input
Other functions	・ Programmable output pulse To each digital output, an ON-delay [1 to 9999 ms] and/or a pulse duration [1 to 9999 ms] can be applied. ・ Rate measurement For each counter, the pulse rate can be measured by defining a time window [1 to 9999 ms]. Up to 64 pulse rate values are stored in the rate history log file. Pulse rate values can be read using an IORD instruction. For each counter, two pulse rate ranges can be defined with upper and lower limits to control the outputs according to the measured pulse rate value. ・ Hysteresis In the range mode, a hysteresis value (1 to 255) can be set to prevent unwanted encoder value fluctuations around the upper and lower limits from switching output on or off.		○	・ Programmable output pulse To each digital output, an ON-delay [1 to 9999 ms] and/or a pulse duration [1 to 9999 ms] can be applied. ・ Rate measurement For each counter, the pulse rate can be measured by defining a time window [1 to 9999 ms]. Up to 64 pulse rate values are stored in the rate history log file. Pulse rate values can be read using an IORD instruction. For each counter, two pulse rate ranges can be defined with upper and lower limits to control the outputs according to the measured pulse rate value. ・ Hysteresis In the range mode, a hysteresis value (1 to 255) can be set to prevent unwanted encoder value fluctuations around the upper and lower limits from switching output on or off.
Noise filtering	To suppress noise on the signal lines A and B of each counter, noise filtering can be used. The cut-off frequencies for the signal lines A and B can be set to: ・ 10 kHz ・ 50 kHz (default) ・ 500 kHz For digital inputs, 10 kHz and 50 kHz (default) noise filtering can be used. For Z-input signals, 1 kHz noise filtering is always used.		○	To suppress noise on the signal lines A and B of each counter, noise filtering can be used. The cut-off frequencies for the signal lines A and B can be set to: ・ 10 kHz ・ 50 kHz (default) ・ 500 kHz For digital inputs, 10 kHz and 50 kHz (default) noise filtering can be used. For Z-input signals, 1 kHz noise filtering is always used.
Initial counter value	・ The initial counter value is transferred to the Unit when the Unit is powered up or restarted.		○	・ The initial counter value is transferred to the Unit when the Unit is powered up or restarted.
IORD- and IOWR-instructions	Run-time configuration and operation of the High-speed Counter Unit is possible by using IORD- and IOWR-instructions. The following data can be read or written: ・ DM-configuration data ・ Range and comparison Data ・ Captured counter value ・ Rate history log file data ・ Counter value ・ (Re)configure High-speed Counter Unit ・ Error clear		○	Run-time configuration and operation of the High-speed Counter Unit is possible by using IORD- and IOWR-instructions. The following data can be read or written: ・ DM-configuration data ・ Range and comparison Data ・ Captured counter value ・ Rate history log file data ・ Counter value ・ (Re)configure High-speed Counter Unit ・ Error clear
Interrupts of outputs	The unit output pattern of digital outputs and soft outputs can be configured to generate interrupts in the CS1 CPU Unit.		○	The unit output pattern of digital outputs and soft outputs can be configured to generate interrupts in the CJ1-H/CJ1M CPU Unit.

Item	CS1W-CT021	CS1W-CT041	CJ1W-CT021	
	Specifications	Specifications	Difference	Specifications
Interrupts of digital inputs	Digital inputs can be configured to generate interrupts in the CS1 CPU Unit.		○	Digital inputs can be configured to generate interrupts in the CJ1-H/CJ1M CPU Unit.
Error history log function	Stores up to 30 error log records.		○	Stores up to 30 error log records.

Difference: Enhanced (◎), Equivalent (○), Degraded (△), or Incompatible feature (×)

(3) Differences in I/O specifications

No differences in I/O specifications.

(4) Differences in memory area allocations

The areas for counters 3 and 4 in CS1W-CT041 will not be used in CJ1W-CT021.

To replace CS1W-CT041, allocate counters 3 and 4 to areas in another CJ1W-CT021.

If they are programmed, replace them by referring to the manual.

(5) Differences in wiring and terminal arrangement

CS1W-CT021/041	CJ1W-CT021
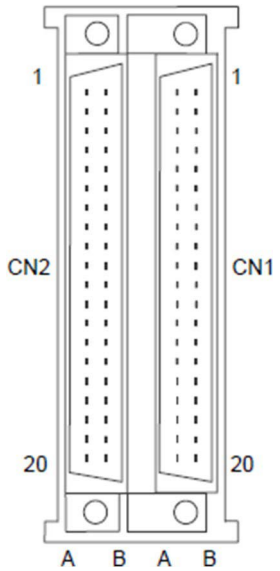	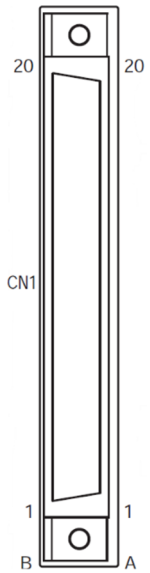

CS1W-CT021/041

CN No.2				CN No.1			
Pin No.	Designation	**Pin No.**	Designation	**Pin No.**	Designation	**Pin No.**	Designation
A1	External Output COM: 0V	B1	External output power supply : 12 to 24 V DC	A1	External Output COM: 0V	B1	External output power supply : 12 to 24 V DC
A2	External Output 2（NPN）	B2	External Output 2（PNP）	A2	External Output 0（NPN）	B2	External Output 0（PNP）
A3	External Output 3（NPN）	B3	External Output 3（PNP）	A3	External Output 1（NPN）	B3	External Output 1（PNP）
A4	Not used	B4	Not used	A4	Not used	B4	Not used
A5	External Control Input 2 : COM	B5	External Control Input 2 : 24 V DC	A5	External Control Input 0 : COM	B5	External Control Input 0 : 24 V DC
A6	External Control Input 3 : COM	B6	External Control Input 3 : 24 V DC	A6	External Control Input 1 : COM	B6	External Control Input 1 : 24 V DC
A7	Not used	B7	Not used	A7	Not used	B7	Not used
A8	Counter 2 Input A : Line Driver -/0 V	B8	Counter 2 Input A : Line Driver +	A8	Counter 1 Input A : Line Driver -/0 V	B8	Counter 1 Input A : Line Driver +
A9	Counter 2 Input A : 12 V DC	B9	Counter 2 Input A : 24 V DC	A9	Counter 1 Input A : 5 V DC	B9	Counter 1 Input A : 24 V DC
A10	Counter 2 Input B : Line Driver -/0 V	B10	Counter 2 Input B : Line Driver +	A10	Counter 1 Input B : Line Driver -/0 V	B10	Counter 1 Input B : Line Driver +
A11	Counter 2 Input B : 12 V DC	B11	Counter 2 Input B : 24 V DC	A11	Counter 1 Input B : 5 V DC	B11	Counter 1 Input B : 24 V DC
A12	Counter 2 Input Z : Line Driver -/0 V	B12	Counter 2 Input Z : Line Driver +	A12	Counter 1 Input Z : Line Driver -/0 V	B12	Counter 1 Input Z : Line Driver +
A13	Counter 2 Input Z : 12 V DC	B13	Counter 2 Input Z : 24 V DC	A13	Counter 1 Input Z : 5 V DC	B13	Counter 1 Input Z : 24 V DC
A14	Not used	B14	Not used	A14	Not used	B14	Not used
A15	Counter 4 Input A : Line Driver -/0 V	B15	Counter 4 Input A : Line Driver +	A15	Counter 3 Input A : Line Driver -/0 V	B16	Counter 3 Input A : Line Driver +
A16	Counter 4 Input A : 12 V DC	B16	Counter 4 Input A : 24 V DC	A16	Counter 3 Input A : 5 V DC	B15	Counter 3 Input A : 24 V DC
A17	Counter 4 Input B : Line Driver -/0 V	B17	Counter 4 Input B : Line Driver +	A17	Counter 3 Input B : Line Driver -/0 V	B17	Counter 3 Input B : Line Driver +
A18	Counter 4 Input B : 12 V DC	B18	Counter 4 Input B : 24 V DC	A18	Counter 3 Input B : 5 V DC	B18	Counter 3 Input B : 24 V DC
A19	Counter 4 Input Z : Line Driver -/0 V	B19	Counter 4 Input Z : Line Driver +	A19	Counter 3 Input Z : Line Driver -/0 V	B19	Counter 3 Input Z : Line Driver +
A20	Counter 4 Input Z : 12 V DC	B20	Counter 4 Input Z : 24 V DC	A20	Counter 3 Input Z : 5 V DC	B20	Counter 3 Input Z : 24 V DC

CJ1W-CT021

CN No.1			
Pin No.	Designation	**Pin No.**	Designation
B20	Counter 2 Input Z : 24 V DC	A20	Counter 2 Input Z : 12 V DC
B19	Counter 2 Input Z : Line Driver +	A19	Counter 2 Input Z : Line Driver -/0 V
B18	Counter 2 Input B : 24 V DC	A18	Counter 2 Input B : 12 V DC
B17	Counter 2 Input B : Line Driver +	A17	Counter 2 Input B : Line Driver -/0 V
B16	Counter 2 Input A : 24 V DC	A16	Counter 2 Input A : 12 V DC
B15	Counter 2 Input A : Line Driver +	A15	Counter 2 Input A : Line Driver -/0 V
B14	Not used	A14	Not used
B13	Counter 1 Input Z : 24 V DC	A13	Counter 1 Input Z : 5 V DC
B12	Counter 1 Input Z : Line Driver +	A12	Counter 1 Input Z : Line Driver -/0 V
B11	Counter 1 Input B : 24 V DC	A11	Counter 1 Input B : 5 V DC
B10	Counter 1 Input B : Line Driver +	A10	Counter 1 Input B : Line Driver -/0 V
B9	Counter 1 Input A : 24 V DC	A9	Counter 1 Input A : 5 V DC
B8	Counter 1 Input A : Line Driver +	A8	Counter 1 Input A : Line Driver -/0 V
B7	Not used	A7	Not used
B6	External Control Input 1 : 24 V DC	A6	External Control Input 1 : COM
B5	External Control Input 0 : 24 V DC	A5	External Control Input 0 : COM
B4	Not used	A4	Not used
B3	External Output 1（PNP）	A3	External Output 1（NPN）
B2	External Output 0（PNP）	A2	External Output 0（NPN）
B1	External output power supply : 12 to 24 V DC	A1	External Output COM: 0V

Reference manuals

CS1W-CT0□1: *CS-series High-speed Counter Units Operation Manual*l (Cat. No. W902)

CJ1W-CT021: *CJ-series High-speed Counter Units Operation Manual* (Cat. No. W401)

Appendix 6.23. CS1W-NC4□3/2□3/1□3

(1) Selection of a replacement model and notes for replacement

Selection of a replacement model: Take into account whether to use CS1W-NC4□3/2□3/1□3 functions and performance requirements.

Replacement model	Notes and restrictions
CJ1W-NC4□3/2□3/1□3	● Equivalent in the functions and capabilities. ● The CIO areas and DM areas remain the same. ● Only NC4□3 is different in the output specifications.

(2) Differences in functions and capabilities

Item	CS1W-NC4□3/2□3/1□3	CJ1W-NC4□3/2□3/1□3	
	Specifications	Difference	Specifications
Unit number allocation	Allocate Unit numbers in the range 0 to 95. ・1-axis and 2-axis PCUs: Unit 1 allocated ・4-axis PCUs: Unit 2 allocated	○	Allocate Unit numbers in the range 0 to 95. ・1-axis and 2-axis PCUs: Unit 1 allocated ・4-axis PCUs: Unit 2 allocated
Pulse output type	2 types: open collector output and line driver output	○	2 types: open collector output and line driver output
Format of data exchanged between PLC and PCU	Binary format (hexadecimal) Example: Present position is output to the PLC in 32-bit signed binary format.	○	Binary format (hexadecimal) Example: Present position is output to the PLC in 32-bit signed binary format.
Position designation range	-1,073,741,823 to 1,073,741,823 pulses	○	-1,073,741,823 to 1,073,741,823 pulses
Present position range	-2,147,483,647 to 2,147,483,647 pulses	○	-2,147,483,647 to 2,147,483,647 pulses
Zone range	-1,073,741,823 to 1,073,741,823 pulses	○	-1,073,741,823 to 1,073,741,823 pulses
Speed designation range	1 to 500,000 pps, set in pps units	○	1 to 500,000 pps, set in pps units
PLC scan timeover for END refresh	0.5 ms max. per unit	○	0.5 ms max. per unit
PLC scan timeover due to IOWR/IORD instruction	1 ms max. per instruction	○	1 ms max. per instruction
Time between startup instruction from the ladder program and pulse output	2 ms max.	○	2 ms max.
Operating data area	The following 3 areas can be specified: Area words allocated to Special I/O Units, user-specified DM area words, and user-specified EM area words.	○	The following 3 areas can be specified: Area words allocated to Special I/O Units, user-specified DM area words, and user-specified EM area words.
Corresponding EM banks	Banks 0 to C	○	Banks 0 to C
Clearing error codes	Possible	○	Possible
Parameter setting	Settings only required for the axes being used.	○	Settings only required for the axes being used.
External I/O connector	48 pins	×	40 pins
Support software	CX-Position	○	CX-Position

Difference: Enhanced (◎), Equivalent (○), Degraded (△), or Incompatible feature (×)

(3) Differences in output specifications

CS1W-NC4□3 and CJ1W-NC4□3 are different in the output specifications.

CS1W-NC2□3/1□3 and CJ1W-CS1W-NC2□3/1□3 are the same in the output specifications.

CS1W-NC4□3

Item		CS1W-NC4□3	CJ1W-NC4□3	
		Specifications	Difference	Specifications
Open collector output	Maximum switching capacity	NPN open collector 30 mA at 4.75 to 26.4 VDC (16 mA: Terminals with 1.6-kΩ limit resistance)	△	NPN open collector 30 mA at 4.75 to 25.2 VDC (16 mA: Terminals with 1.6-kΩ limit resistance)
	Minimum switching capacity	NPN open collector 7 mA at 4.75 to 26.4 VDC	△	NPN open collector 7 mA at 4.75 to 25.2 VDC
	Leakage current	0.1 mA max.	○	0.1 mA max.
	Residual voltage	0.6 V max. (pulse output) 1.0 V max. (error counter reset output)	○	0.6 V max. (pulse output) 1.0 V max. (error counter reset output)
Line driver output		Corresponds to Am26LS31. Maximum output current: 20 mA	○	Corresponds to Am26LS31. Maximum output current: 20 mA
External power supply		24 VDC ±10% NC413: 90 mA max. NC433: 30 mA max. 5 VDC±5% NC433: 220 mA max.	△	24 VDC ±10% NC413: 100 mA max. NC433: 30 mA max. 5 VDC±5% NC433: 230 mA max.

(4) Differences in memory area allocations

The memory area allocations remain the same.

(5) Differences in wiring and terminal arrangement

CS1W-NC4□3/2□3/1□3 (terminal arrangement)	CJ1W-NC4□3/2□3/1□3 (terminal arrangement)
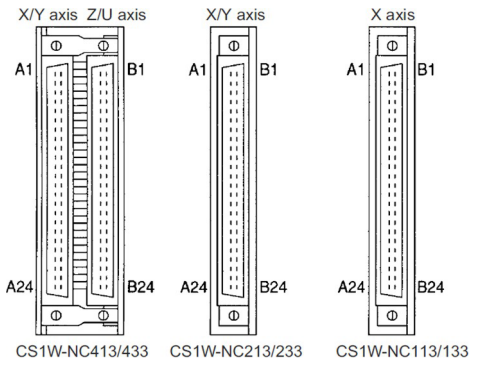	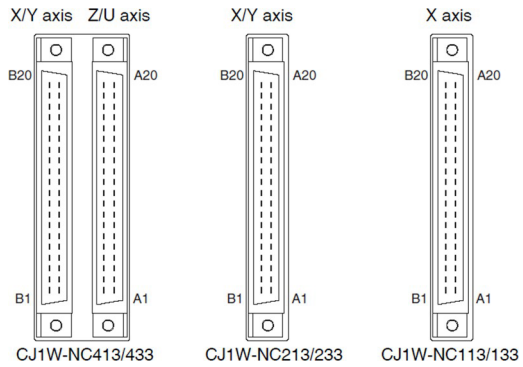

CS1W-NC413/213/113 (pulse/open collector output)

Connector pin arrangement for X and Z axes			Connector pin arrangement for Y and U axes		
Pin No.	I/O	Designation	Pin No.	I/O	Designation
A1	IN	Output power supply, 24 VDC	B1	IN	Output power supply, 24 VDC
A2	IN	Output GND, 24 VDC	B2	IN	Output GND, 24 VDC
A3	---	Not used	B3	---	Not used
A4	---	Not used	B4	---	Not used
A5	OUT	CW pulse output	B5	OUT	CW pulse output
A6	OUT	CW pulse output with 1.6-kΩ resistance	B6	OUT	CW pulse output with 1.6-kΩ resistance
A7	OUT	CCW pulse/direction output	B7	OUT	CCW pulse/direction output
A8	OUT	CCW pulse/direction output with 1.6-kΩ resistance	B8	OUT	CCW pulse/direction output with 1.6-kΩ resistance
A9	---	Not used	B9	---	Not used
A10	OUT	Error counter reset output/origin-adjustment command output	B10	OUT	Error counter reset output/origin-adjustment command output
A11	OUT	Error counter reset output with 1.6-kΩ resistance Origin-adjustment command output with 1.6-kΩ resistance	B11	OUT	Error counter reset output with 1.6-kΩ resistance Origin-adjustment command output with 1.6-kΩ resistance
A12	IN	Positioning completed input signal	B12	IN	Positioning completed input signal
A13	---	Not used	B13	---	Not used
A14	IN	Origin common	B14	IN	Origin common
A15	IN	Origin input signal (24 V)	B15	IN	Origin input signal (24 V)
A16	IN	Origin input signal (5 V)	B16	IN	Origin input signal (5 V)
A17	---	Not used	B17	---	Not used
A18	---	Not used	B18	---	Not used
A19	IN	Interrupt input signal	B19	IN	Interrupt input signal
A20	IN	Emergency stop input signal	B20	IN	Emergency stop input signal
A21	IN	Origin proximity input signal	B21	IN	Origin proximity input signal
A22	IN	CW limit input signal	B22	IN	CW limit input signal
A23	IN	CCW limit input signal	B23	IN	CCW limit input signal
A24	IN	Input common	B24	IN	Input common

CJ1W-NC413/213/113 (pulse/open collector output)

Connector pin arrangement for X and Z axes			Connector pin arrangement for Y and U axes		
Pin No.	I/O	Designation	Pin No.	I/O	Designation
A1	IN	Power supply, 24 V DC (for output signals)	B1	IN	Power supply, 24 V DC (for output signals)
A2	IN	GND, 24 V DC (for output signals)	B2	IN	GND, 24 V DC (for output signals)
A3	---	Not used	B3	---	Not used
A4	---	Not used	B4	---	Not used
A5	OUT	CW pulse output	B5	OUT	CW pulse output
A6	OUT	CW pulse output with 1.6-kΩ resistance	B6	OUT	CW pulse output with 1.6-kΩ resistance
A7	OUT	CCW pulse/direction output	B7	OUT	CCW pulse/direction output
A8	OUT	CCW pulse/direction output with 1.6-kΩ resistance	B8	OUT	CCW pulse/direction output with 1.6-kΩ resistance
A9	OUT	Error counter reset output/origin-adjustment command output	B9	OUT	Error counter reset output/origin-adjustment command output
A10	OUT	Error counter reset output with 1.6-kΩ resistance Origin-adjustment command output with 1.6-kΩ resistance	B10	OUT	Error counter reset output with 1.6-kΩ resistance Origin-adjustment command output with 1.6-kΩ resistance
A11	IN	Positioning completed input signal	B11	IN	Positioning completed input signal
A12	IN	Origin common	B12	IN	Origin common
A13	IN	Origin input signal (24 V)	B13	IN	Origin input signal (24 V)
A14	IN	Origin input signal (5 V)	B14	IN	Origin input signal (5 V)
A15	IN	Interrupt input signal	B15	IN	Interrupt input signal
A16	IN	Emergency stop input signal	B16	IN	Emergency stop input signal
A17	IN	Origin proximity input signal	B17	IN	Origin proximity input signal
A18	IN	CW limit input signal	B18	IN	CW limit input signal
A19	IN	CCW limit input signal	B19	IN	CCW limit input signal
A20	IN	Input common	B20	IN	Input common

CS1W-NC433/233/133 (Line driver output)

Connector pin arrangement for X and Z axes			Connector pin arrangement for Y and U axes		
Pin No.	I/O	Designation	Pin No.	I/O	Designation
A1	IN	Output power supply, 24 VDC	B1	IN	Output power supply, 24 VDC
A2	IN	Output GND, 24 VDC	B2	IN	Output GND, 24 VDC
A3	IN	Pulse output GND, 5 VDC*	B3	IN	Pulse output GND, 5 VDC*
A4	IN	Pulse output power supply, 5 VDC*	B4	IN	Pulse output power supply, 5 VDC*
A5	OUT	CW pulse output (+)	B5	OUT	CW pulse output (+)
A6	OUT	CW pulse output (–)	B6	OUT	CW pulse output (–)
A7	OUT	CCW pulse/direction output (+)	B7	OUT	CCW pulse/direction output (+)
A8	OUT	CCW pulse/direction output (–)	B8	OUT	CCW pulse/direction output (–)
A9	---	Not used	B9	---	Not used
A10	OUT	Error counter reset output/origin-adjustment command output	B10	OUT	Error counter reset output/origin-adjustment command output
A11	OUT	Error counter reset output with 1.6-kΩ resistance Origin-adjustment command output with 1.6-kΩ resistance	B11	OUT	Error counter reset output with 1.6-kΩ resistance Origin-adjustment command output with 1.6-kΩ resistance
A12	IN	Positioning completed input signal	B12	IN	Positioning completed input signal
A13	---	Not used	B13	---	Not used
A14	IN	Origin common	B14	IN	Origin common
A15	IN	Origin input signal (24 V)	B15	IN	Origin input signal (24 V)
A16	IN	Origin input signal (5 V)	B16	IN	Origin input signal (5 V)
A17	---	Not used	B17	---	Not used
A18	---	Not used	B18	---	Not used
A19	IN	Interrupt input signal	B19	IN	Interrupt input signal
A20	IN	Emergency stop input signal	B20	IN	Emergency stop input signal
A21	IN	Origin proximity input signal	B21	IN	Origin proximity input signal
A22	IN	CW limit input signal	B22	IN	CW limit input signal
A23	IN	CCW limit input signal	B23	IN	CCW limit input signal
A24	IN	Input common	B24	IN	Input common

CJ1W-NC433/233/133 (Line driver output)

Connector pin arrangement for X and Z axes			Connector pin arrangement for Y and U axes		
Pin No.	I/O	Designation	Pin No.	I/O	Designation
A1	IN	Power supply, 24 V DC (for output signals)	B1	IN	Power supply, 24 V DC (for output signals)
A2	IN	GND, 24 V DC (for output signals)	B2	IN	GND, 24 V DC (for output signals)
A3	IN	GND, 5 V DC (for pulse output)*	B3	IN	GND, 5 V DC (for pulse output)*
A4	IN	Power supply, 5 V DC (for pulse output)*	B4	IN	Power supply, 5 V DC (for pulse output)*
A5	OUT	CW pulse output (+)	B5	OUT	CW pulse output (+)
A6	OUT	CW pulse output (–)	B6	OUT	CW pulse output (–)
A7	OUT	CCW pulse/direction output (+)	B7	OUT	CCW pulse/direction output (+)
A8	OUT	CCW pulse/direction output (–)	B8	OUT	CCW pulse/direction output (–)
A9	OUT	Error counter reset output/origin-adjustment command output	B9	OUT	Error counter reset output/origin-adjustment command output
A10	OUT	Error counter reset output with 1.6-kΩ resistance Origin-adjustment command output with 1.6-kΩ resistance	B10	OUT	Error counter reset output with 1.6-kΩ resistance Origin-adjustment command output with 1.6-kΩ resistance
A11	IN	Positioning completed input signal	B11	IN	Positioning completed input signal
A12	IN	Origin common	B12	IN	Origin common
A13	IN	Origin input signal (24 V)	B13	IN	Origin input signal (24 V)
A14	IN	Origin input signal (5 V)	B14	IN	Origin input signal (5 V)
A15	IN	Interrupt input signal	B15	IN	Interrupt input signal
A16	IN	Emergency stop input signal	B16	IN	Emergency stop input signal
A17	IN	Origin proximity input signal	B17	IN	Origin proximity input signal
A18	IN	CW limit input signal	B18	IN	CW limit input signal
A19	IN	CCW limit input signal	B19	IN	CCW limit input signal
A20	IN	Input common	B20	IN	Input common

(6) How to migrate the CX-Position setting data

Migrate the CX-Position data from CS1W-NC□□3 to CJ1W-NC□□3.

*The following function works with CX-Position Ver. 2.55 or later.

Right-click to select the CS1W-NC Unit and select **Copy**.

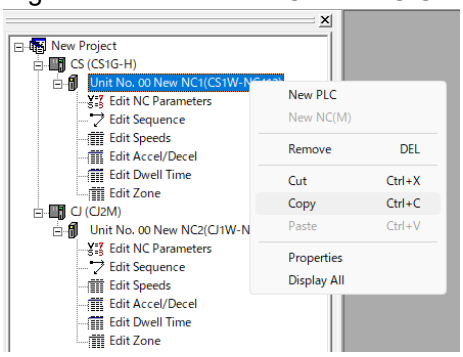

Right-click to select the destination CJ1W-NC Unit, select **Paste**, and click **OK** to copy the settings.
*After pasting, make sure that the settings have been successfully set.

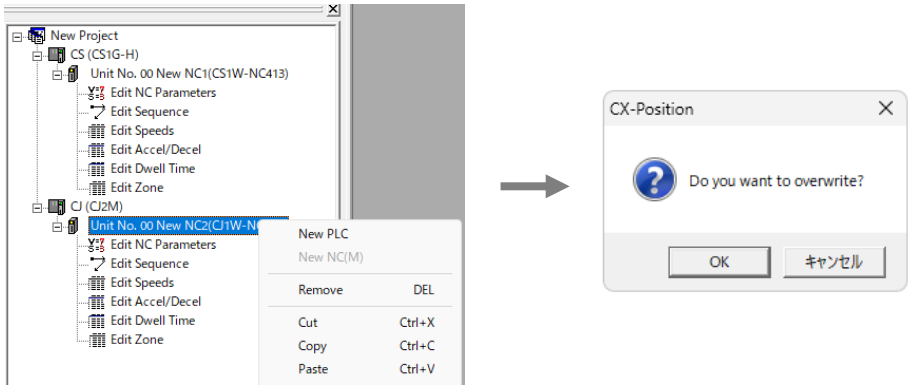

Reference manuals

CS1W-NC□□3: *CS-series Position Control Units Operation Manual* (Cat. No. W376)

CJ1W-NC□□3: *CJ-series Position Control Units Operation Manual* (Cat. No. W397)

Note: Do not use this document to operate the Unit.

OMRON Corporation **Industrial Automation Company**

Kyoto, JAPAN **Contact : www.ia.omron.com**

Regional Headquarters

OMRON EUROPE B.V.
Wegalaan 67-69, 2132 JD Hoofddorp
The Netherlands
Tel: (31) 2356-81-300 Fax: (31) 2356-81-388

OMRON ELECTRONICS LLC
2895 Greenspoint Parkway, Suite 200
Hoffman Estates, IL 60169 U.S.A.
Tel: (1) 847-843-7900 Fax: (1) 847-843-7787

OMRON ASIA PACIFIC PTE. LTD.
438B Alexandra Road, #08-01/02 Alexandra
Technopark, Singapore 119968
Tel: (65) 6835-3011 Fax: (65) 6835-3011

OMRON (CHINA) CO., LTD.
Room 2211, Bank of China Tower,
200 Yin Cheng Zhong Road,
PuDong New Area, Shanghai, 200120, China
Tel: (86) 21-6023-0333 Fax: (86) 21-5037-2388

Authorized Distributor:

©OMRON Corporation 2023-2026 All Rights Reserved.
In the interest of product improvement,
specifications are subject to change without notice.

Cat. No. P164-E1-04 0926 (0923)